TADANO

Tadano Rough Terrain Crane

# GR-600N

(5-section boom, 2-section full automatic jib, H-type outriggers)

## Specifications

Spec. No. GR-600N-3-00101

TADANO LTD.

Control No. JA-01

TADANO

Lifting your dreams

# GR-600N (Ⅲ)

5-section boom
2-section full automatic jib
H-type outriggers

CREVO 600 G4

## ■Specifications

### ●Crane

| | | |
|---|---|---|
| Crane capacity | 10.3 m boom | 60,000 kg × 1.8 m (13 parts of line) |
| | 14.1 m boom | 35,000 kg × 4.0 m (7 parts of line) |
| | 17.8 m boom | 35,000 kg × 3.5 m (7 parts of line) |
| | 25.4 m boom | 20,300 kg × 5.5 m (5 parts of line) |
| | 33.6 m boom | 14,000 kg × 6.5 m (4 parts of line) |
| | 37.3 m boom | 11,000 kg × 8.0 m (4 parts of line) |
| | 40.0 m boom | 7,600 kg × 12.0 m (4 parts of line) |
| | 41.2 m boom | 7,200 kg × 11.0 m (4 parts of line) |
| | 8.5 m jib | 3,800 kg × 16.0 m (1 part of line) |
| | 13.7 m jib | 2,500 kg × 20.0 m (1 part of line) |
| | Single top | 5,000 kg (1 part of line) |
| Maximum lifting height | Boom | 42.6 m |
| | Jib | 55.8 m |
| Maximum load radius | Boom | 36.0 m (standard), 38.0 m (Smart Chart) |
| | Jib | 40.0 m (standard), 42.0 m (Smart Chart) |
| Boom length | | 10.3 m to 41.2 m |
| Boom telescoping length | | 30.9 m |
| Boom extension speed | | 30.9 m/127 s |
| Jib length | | 8.5m to 13.7 m |
| Hoist up speed (rope speed) | Main | 127 m/min (5th layer) |
| | Auxiliary | 112 m/min (3rd layer) |
| Hook block hoist up speed | Main | 18.1 m/min (7 parts of line) |
| | Auxiliary | 112 m/min (1 part of line) |
| Hoist down speed (rope speed) [reference] | Main | Standard:127 m/min (5th layer), high-speed: 195 m/min (5th layer) |
| | Auxiliary | Standard: 106 m/min (3rd layer), high-speed:163 m/min (3rd layer) |
| Boom elevating angle | | 0 to 83.5° |
| Boom raising speed | | 0 to 83.5°/48 s |
| Slewing angle | | 360° continuous |
| Slewing speed | | 2.2 $min^{-1}$ (rpm) |
| Wire rope | Main | Dia. 16 mm x length 230 m rotation-resistant wire rope |
| | Auxiliary | Dia. 16 mm x length 120 m rotation-resistant wire rope |
| Boom | | Round-construction, 5-section hydraulic telescoping type (2nd section sequential, 3rd/4th/5th sections synchronized) |
| Boom telescoping system | | 2 double-acting direct-pushing hydraulic cylinders, 2 wire-rope boom telescoping systems |
| Jib type | | Quick-turn type (stored alongside and below boom)<br>2-section (hydraulically telescoping), offset (5-60°) Hydraulic stepless tilt type |
| Single top | | Fixed to top boom |
| Hoisting system | | Hydraulic motor driven planetary gear speed reducer, automatic brake, high-speed hoist down, 2 single winches, with pressure compensating flow control valve |
| Boom elevating system | | 1 double-acting direct-pushing hydraulic cylinder, with pressure compensating flow control valve |
| Slewing system | | Hydraulic motor driven planetary gear speed reducer, ball bearing, slewing free/lock interchangeable, negative brake |
| Outriggers | | Fully hydraulic H-type (floats mounted integrally), slides and jacks with independent operation device<br>Extension width: maximum 7.6 m; middle 7.2 m, 6.5 m, 5.28 m, 4.28 m; minimum 2.36 m |
| Operation method | | Electric operated |
| Maximum load of outrigger | | 35.8 t |
| Power take off | | PTO wet multiplate clutch type |
| Hydraulic pump | | Tandem variable piston pump, tandem gear pump |
| Safety devices | | Lord moment indicator (LMI), slewing automatic stop device, elevation slow stop device, anti-two-block device, working range limiter, outrigger extension width detector, boom telescoping cylinder hydraulic lock, boom elevating cylinder hydraulic lock, power tilt cylinder hydraulic lock, level gauge, hydraulic safety valve, jack cylinder hydraulic lock, slewing lock, jib telescoping cylinder hydraulic lock, hook safety latch |
| Standard equipment | | Full automatic air conditioner with dehumidifier, hydraulic oil temperature gauge, loudspeaker, AM/FM radio, oil cooler, visual drum rotation indicator, drum rotation beeper, slewing motion beeper<br>Operating pedals...ISO layout: for boom telescoping and auxiliary winch<br>Tadano layout: for boom elevating and boom telescoping<br>Radio controller for work preparation, telematics, wireless LAN communication terminal, fuel consumption monitor, eco mode, hydraulic oil clogging alarm |
| Accessories | | Wood blocks (4 pcs.), aluminum pads (4 pcs.) |

### ●Carrier

| | | |
|---|---|---|
| Vehicle name/model | | Tadano YDS-T016 |
| Engine | Model | Cummins QSL9−4B<br>(with turbocharger, intake air cooling, urea SCR system) |
| | Type | Water-cooled, 4-cycle, 6-cylinder, direct injection diesel engine |
| | Displacement | 8.849 L |
| | Maximum output | 283 kW (385PS)/1,900$min^{-1}$ (rpm) |
| | Maximum torque | 1,627 N·m (166kgf·m)/1,500$min^{-1}$ (rpm) |
| Torque converter | | 3-element 1-section (with automatic lockup mechanism) |
| Transmission | | Automatic and manual transmission, power shift type (wet multiplate clutch)<br>4 forward and 1 reverse speeds (with Hi/Low settings) |
| Speed Reducer | | Axle two-stage deceleration (2nd, 3rd axles) |
| Driving method | | 4WD (6 x 4) |
| Axle (all axles) | | Full-floating type |
| Suspension (all axles) | | Hydraulic pneumatic suspension (with hydraulic lock cylinder) |
| Steering | | Fully hydraulic power steering |
| Brakes | Main brake | Hydro-pneumatic disk brake |
| | Parking brake | Air drive shaft internal expanding type (3rd axle) |
| | Auxiliary brake | Permanent-magnetic retarder, engine retarder, auxiliary operating brake |
| Frame | | Welded box-shaped structure |
| Batteries | | 12V-120Ah x 2 (24V) |
| Fuel tank capacity | | 400 L |
| Urea water tank | | 38 L |
| Tires | Front wheels | 385/95 R25 170E road |
| | Rear wheels | 385/95 R25 170E road |
| Cab | | Crew capacity: 1 person, with interior fittings, liquid-sealed rubber mounting type (viscous), fully adjustable seat<br>(with headrest, armrests, seat belt), adjustable handle (tilt, telescoping), intermittent front and ceiling wipers (with washers), power windows, side visors |
| Safety devices | | Emergency steering device, suspension lock unit, rear wheel steering lock device, engine over-run alarm, over-shift prevention device, parking brake alarm, boom left/right side cameras, radiator fluid level warning device, hydraulic oil leak warning device |
| Standard equipment | | Electromotive retractable mirror with heater, overview video display, Immobilizer, tire chocks, LED headlamps, human alert |

### ●Options

Winch drum monitoring camera, remote control searchlight, AML external warning lamp, position lamps, marker lamps, LED marker lamps, external auditory alarms, centralized lubrication system, halogen head lamps, rear monitoring work camera, anemometer, LED flood lamps

### ●Dimensions when traveling

| | | |
|---|---|---|
| Overall length | | 12,895 mm |
| Overall width | | 2,780 mm |
| Overall height | | 3,720 mm |
| Wheel base | | 1,850 mm<br>+<br>4,450 mm |
| Wheel track | Front wheels | 2,330 mm |
| | Rear wheels | 2,330 mm |

### ●Running performance

| | |
|---|---|
| Maximum speed | 49 km/h |
| Gradability (tanθ) | 0.46 |
| Minimum turning radius | 6.7 m<br>(6 wheel steering) |
| | 11.0 m<br>(front 4 wheel steering) |

### ●Weight

| | |
|---|---|
| Gross vehicle weight | 36,195 kg |
| Front/front axle load | 11,705 kg |
| Front/rear axle load | 10,745 kg |
| Rear axle load | 13,745 kg |

### ●Maximum jack reaction force (Maximum load of outrigger)

| | |
|---|---|
| Boom | 35.8 t |
| Jib | 27.4 t |

## ■Precautions concerning rated lifting capacity table (when using outriggers)

1. The rated lifting capacities assume that the crane is set horizontally on firm ground, and include the weight of the lifting devices and main winch hook block (35 t hook block: 310 kg) when working with the boom, and the weight of the lifting devices and auxiliary winch hook block (100 kg) when working with the jib. The values above the thick line are based on the structural strength while those below are based on the crane stability factor.
2. The load radius is based on the actual figure including the boom deflection, so always use the load radius as the standard when working with the boom.
3. When using the single top, the number of parts of line is 1.
   The rated lifting capacity for the single top is the value obtained by subtracting 210 kg from the boom rated lifting capacity, and includes the weight of the lifting devices and auxiliary winch hook block (100 kg), and must not exceed 5.0 t.
4. High-speed hoist down should only be used when only the hook block is being lowered. Also, sudden lever operations should be avoided.
5. The standard hook block and standard number of parts of line for each boom length is listed in each rated lifting capacity chart for the boom. However, when using other number of parts of line, the load per line must not exceed 5.0 t for main winch wire rope, or 5.0 t for auxiliary wire rope.
6. When using the jib, the number of parts of line is 1.
7. The lifting capacity in the over-side area depends on the extension width of the outriggers. Perform work within the capacity according to the extension width. The lifting capacity for the over-front and over-rear areas is the rated lifting capacity of the "extension width of outriggers 7.6 m," but the range (angle a, b) in the over-front and over-rear areas depends on the combination for over-front and over-rear outrigger extension widths in use.

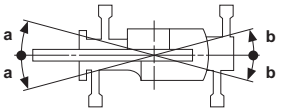


| Over-front area | | | | | | | | |
|---|---|---|---|---|---|---|---|---|
| Angle a° | | | Front outrigger extension | | | | | |
| | | | Maximum extension | Middle extension | | | | Minimum extension |
| | | | 7.6 m | 7.2 m | 6.5 m | 5.28 m | 4.28 m | 2.36 m |
| Rear outrigger extension | Maximum extension | 7.6 m | 90 | 35 | 25 | 15 | 10 | 5 |
| | Middle extension | 7.2 m | 70 | 30 | 25 | 15 | 10 | 5 |
| | | 6.5 m | 35 | 30 | 20 | 15 | 10 | 5 |
| | | 5.28 m | 30 | 25 | 20 | 10 | 5 | 5 |
| | | 4.28 m | 25 | 20 | 15 | 10 | 5 | 5 |
| | Minimum extension | 2.36 m | 20 | 15 | 15 | 10 | 5 | – |

| Over-rear area | | | | | | | | |
|---|---|---|---|---|---|---|---|---|
| Angle b° | | | Front outrigger extension | | | | | |
| | | | Maximum extension | Middle extension | | | | Minimum extension |
| | | | 7.6 m | 7.2 m | 6.5 m | 5.28 m | 4.28 m | 2.36 m |
| Rear outrigger extension | Maximum extension | 7.6 m | 90 | 70 | 35 | 30 | 25 | 20 |
| | Middle extension | 7.2 m | 70 | 30 | 30 | 25 | 20 | 20 |
| | | 6.5 m | 25 | 25 | 20 | 20 | 15 | 15 |
| | | 5.28 m | 15 | 15 | 15 | 10 | 10 | 10 |
| | | 4.28 m | 10 | 10 | 10 | 5 | 5 | 5 |
| | Minimum extension | 2.36 m | 5 | 5 | 5 | 5 | 5 | – |

8. In the Smart Chart capacity, the over-front and over-rear areas (angle c, d) in which work can be performed vary depending upon the combination of front and back outrigger extension widths in use. Additionally, the over-side lifting capability will be the standard capacity corresponding to the extension width of the outriggers.

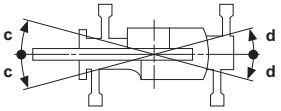


| Over-front area | | | | | | | | |
|---|---|---|---|---|---|---|---|---|
| Angle c° | | | Front outrigger extension | | | | | |
| | | | Maximum extension | Middle extension | | | | Minimum extension |
| | | | 7.6 m | 7.2 m | 6.5 m | 5.28 m | 4.28 m | 2.36 m |
| Rear outrigger extension | Maximum extension | 7.6 m | 45 | 30 | 20 | 15 | 10 | 5 |
| | Middle extension | 7.2 m | 45 | 25 | 20 | 10 | 10 | 5 |
| | | 6.5 m | 30 | 25 | 20 | 10 | 5 | 5 |
| | | 5.28 m | 25 | 20 | 15 | 10 | 5 | 5 |
| | | 4.28 m | 20 | 20 | 15 | 10 | 5 | 5 |
| | Minimum extension | 2.36 m | 15 | 15 | 10 | 5 | 5 | – |

| Over-rear area | | | | | | | | |
|---|---|---|---|---|---|---|---|---|
| Angle d° | | | Front outrigger extension | | | | | |
| | | | Maximum extension | Middle extension | | | | Minimum extension |
| | | | 7.6 m | 7.2 m | 6.5 m | 5.28 m | 4.28 m | 2.36 m |
| Rear outrigger extension | Maximum extension | 7.6 m | 25 | 25 | 25 | 25 | 20 | 20 |
| | Middle extension | 7.2 m | 25 | 25 | 25 | 20 | 20 | 15 |
| | | 6.5 m | 20 | 20 | 20 | 15 | 15 | 10 |
| | | 5.28 m | 15 | 10 | 10 | 10 | 10 | 5 |
| | | 4.28 m | 10 | 10 | 5 | 5 | 5 | 5 |
| | Minimum extension | 2.36 m | 5 | 5 | 5 | 5 | 5 | – |

### Explanation of symbols used in rated lifting capacity table

| | | | |
|---|---|---|---|
| MB | Indicates boom rated lifting capacity. | m | Indicates load radius. |
| FAJ | Indicates full automatic jib (FAJ) rated lifting capacity. | % | Indicates boom telescoping condition (telescoping ratio %).<br>MODE indicates boom telescoping mode. |
| | Indicates extension width of outriggers. | | Indicates boom elevation angle range in which operation is possible without load. |
| 360 ° | Indicates slewing range in which lifting may be performed. | | Indicates jib length for full automatic jib (FAJ). |
| SMART CHART<br>Smart Chart | Indicates that work can be performed with the Smart Chart capacity, if Smart Chart is available. | | Indicates full automatic jib (FAJ) offset angle, which is the angle between the centerlines of the boom and jib. |
| t<br>JPN | Indicates rated lifting capacity unit. | | Indicates standard number of parts of line. |
| m | Indicates boom length. | | Indicates standard hook block. |

## ■Boom telescoping mode

There are two types of boom telescoping modes, "telescoping mode 1" (2nd boom section extends first) and "telescoping mode 2" (3rd/4th top boom section extends first). "Telescoping mode 1" prioritizes strength capacity zone, "telescoping mode 2" prioritizes stability zone. Boom lengths and telescoping ratio for each telescoping mode are as shown in the illustration below. The boom telescoping mode cannot be selected unless the boom is fully retracted or extended.

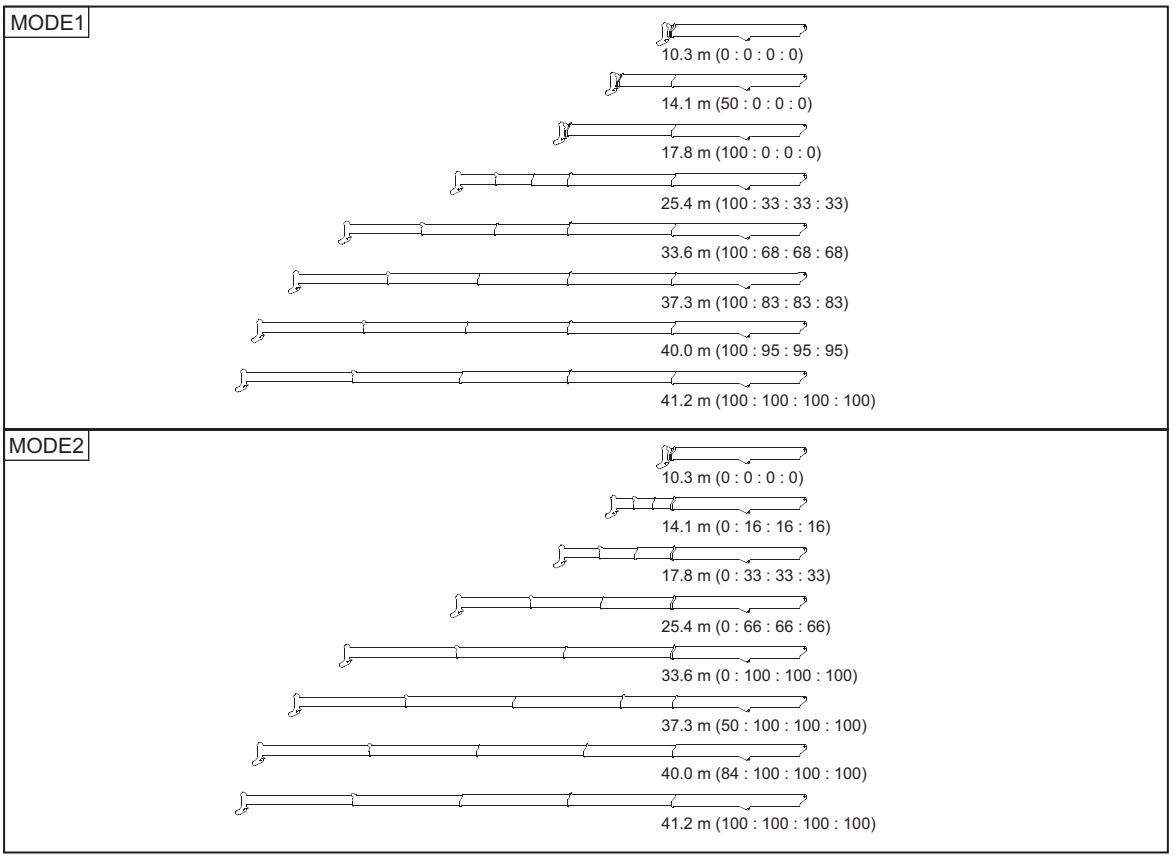


## ■Boom rated lifting capacity table

| MB | | | Smart Chart | JPN |
|---|---|---|---|---|

| m | 10.3 | 14.1 | 14.1 | 17.8 | 17.8 | 25.4 | 25.4 | 33.6 | 33.6 | 37.3 | 37.3 | 40.0 | 40.0 | 41.2 | m |
|---|---|---|---|---|---|---|---|---|---|---|---|---|---|---|---|
| 1.8 | * 60.00 | 35.00 | 20.30 | 35.00 | 20.30 | 20.30 | 16.80 | | | | | | | | 1.8 |
| 2.1 | * 57.00 | 35.00 | 20.30 | 35.00 | 20.30 | 20.30 | 16.80 | | | | | | | | 2.1 |
| 2.5 | * 55.00 | 35.00 | 20.30 | 35.00 | 20.30 | 20.30 | 16.80 | 14.00 | 12.00 | | | | | | 2.5 |
| 3.0 | 50.00 | 35.00 | 20.30 | 35.00 | 20.30 | 20.30 | 16.80 | 14.00 | 12.00 | 11.00 | 10.00 | | | | 3.0 |
| 3.5 | 42.00 | 35.00 | 20.30 | 35.00 | 20.30 | 20.30 | 16.80 | 14.00 | 12.00 | 11.00 | 10.00 | 7.60 | 7.60 | 7.20 | 3.5 |
| 4.0 | 39.20 | 35.00 | 20.30 | 34.50 | 20.30 | 20.30 | 16.80 | 14.00 | 12.00 | 11.00 | 10.00 | 7.60 | 7.60 | 7.20 | 4.0 |
| 4.5 | 36.60 | 34.70 | 20.30 | 32.50 | 20.30 | 20.30 | 16.80 | 14.00 | 12.00 | 11.00 | 10.00 | 7.60 | 7.60 | 7.20 | 4.5 |
| 5.0 | 34.10 | 32.60 | 20.30 | 30.70 | 20.30 | 20.30 | 16.80 | 14.00 | 11.40 | 11.00 | 10.00 | 7.60 | 7.60 | 7.20 | 5.0 |
| 5.5 | 30.70 | 30.40 | 20.30 | 29.00 | 20.30 | 20.30 | 16.80 | 14.00 | 10.80 | 11.00 | 10.00 | 7.60 | 7.60 | 7.20 | 5.5 |
| 6.0 | 27.70 | 27.50 | 20.30 | 27.20 | 20.30 | 19.90 | 16.60 | 14.00 | 10.30 | 11.00 | 10.00 | 7.60 | 7.60 | 7.20 | 6.0 |
| 6.5 | 25.20 | 24.90 | 20.30 | 24.70 | 20.30 | 19.00 | 15.80 | 14.00 | 9.80 | 11.00 | 10.00 | 7.60 | 7.60 | 7.20 | 6.5 |
| 7.0 | 23.10 | 22.80 | 20.30 | 22.60 | 20.30 | 18.20 | 15.00 | 13.80 | 9.40 | 11.00 | 9.80 | 7.60 | 7.60 | 7.20 | 7.0 |
| 8.0 | | 19.20 | 20.30 | 19.00 | 20.30 | 16.80 | 13.70 | 12.90 | 8.60 | 11.00 | 9.00 | 7.60 | 7.60 | 7.20 | 8.0 |
| 9.0 | | 15.80 | 17.10 | 15.60 | 17.50 | 15.40 | 12.50 | 12.00 | 7.90 | 10.80 | 8.30 | 7.60 | 7.60 | 7.20 | 9.0 |
| 10.0 | | 13.30 | 14.50 | 13.10 | 14.90 | 14.10 | 11.50 | 11.20 | 7.30 | 10.10 | 7.70 | 7.60 | 7.60 | 7.20 | 10.0 |
| 11.0 | | 11.30 | 12.50 | 11.10 | 12.90 | 12.10 | 10.70 | 10.50 | 6.70 | 9.50 | 7.20 | 7.60 | 7.40 | 7.20 | 11.0 |
| 12.0 | | | | 9.60 | 11.30 | 10.50 | 10.00 | 9.70 | 6.30 | 9.00 | 6.70 | 7.60 | 7.00 | 7.10 | 12.0 |
| 14.0 | | | | 7.20 | 8.90 | 8.20 | 8.70 | 8.40 | 5.50 | 7.80 | 5.90 | 7.40 | 6.20 | 6.30 | 14.0 |
| 16.0 | | | | | | 6.30 | 7.60 | 6.90 | 4.90 | 6.80 | 5.30 | 6.50 | 5.50 | 5.60 | 16.0 |
| 18.0 | | | | | | 4.80 | 6.10 | 5.40 | 4.40 | 5.50 | 4.80 | 5.60 | 5.00 | 5.10 | 18.0 |
| 20.0 | | | | | | 3.70 | 5.00 | 4.20 | 4.00 | 4.40 | 4.30 | 4.50 | 4.50 | 4.50 | 20.0 |
| 22.0 | | | | | | 2.80 | 4.10 | 3.30 | 3.50 | 3.50 | 3.90 | 3.60 | 3.70 | 3.60 | 22.0 |
| 24.0 | | | | | | | | 2.60 | 3.20 | 2.80 | 3.20 | 2.90 | 3.00 | 2.90 | 24.0 |
| 26.0 | | | | | | | | 2.10 | 2.90 | 2.20 | 2.60 | 2.30 | 2.40 | 2.30 | 26.0 |
| 28.0 | | | | | | | | 1.60 | 2.50 | 1.70 | 2.10 | 1.80 | 1.90 | 1.90 | 28.0 |
| 30.0 | | | | | | | | 1.30 | 2.10 | 1.40 | 1.70 | 1.40 | 1.50 | 1.50 | 30.0 |
| 32.0 | | | | | | | | | | 1.10 | 1.40 | 1.10 | 1.20 | 1.10 | 32.0 |
| 34.0 | | | | | | | | | | 0.85 | 1.20 | 0.85 | 1.00 | 0.90 | 34.0 |
| 36.0 | | | | | | | | | | | | 0.65 | 0.75 | 0.65 | 36.0 |
| 38.0 | | | | | | | | | | | | | | 0.50 | 38.0 |
| % 1 | 0 | 50 | 0 | 100 | 0 | 100 | 0 | 100 | 0 | 100 | 50 | 100 | 84 | 100 | 1 |
| % 2 | 0 | 0 | 16 | 0 | 33 | 33 | 66 | 68 | 100 | 83 | 100 | 95 | 100 | 100 | 2 |
| % 3 | 0 | 0 | 16 | 0 | 33 | 33 | 66 | 68 | 100 | 83 | 100 | 95 | 100 | 100 | 3 |
| % 4 | 0 | 0 | 16 | 0 | 33 | 33 | 66 | 68 | 100 | 83 | 100 | 95 | 100 | 100 | 4 |
| MODE | 1,2 | 1 | 2 | 1 | 2 | 1 | 2 | 1 | 2 | 1 | 2 | 1 | 2 | 1,2 | MODE |
| [DEG] | 0 - 83.5 | | | | | | | | | | | | | | [DEG] |
| | *13/10 | 7 | 5 | 7 | 5 | 5 | 4 | 4 | 4 | 4 | 4 | 4 | 4 | 4 | |
| | Heavy load lifting device | 35 t | | | | | | | | | | | | | |

| MB | | | 7.6 m | 360 ° | JPN |
|---|---|---|---|---|---|

| m | 10.3 | 14.1 | 14.1 | 17.8 | 17.8 | 25.4 | 25.4 | 33.6 | 33.6 | 37.3 | 37.3 | 40.0 | 40.0 | 41.2 | m |
|---|---|---|---|---|---|---|---|---|---|---|---|---|---|---|---|
| 1.8 | * 60.00 | 35.00 | 20.30 | 35.00 | 20.30 | 20.30 | 16.80 | | | | | | | | 1.8 |
| 2.1 | * 57.00 | 35.00 | 20.30 | 35.00 | 20.30 | 20.30 | 16.80 | | | | | | | | 2.1 |
| 2.5 | * 55.00 | 35.00 | 20.30 | 35.00 | 20.30 | 20.30 | 16.80 | 14.00 | 12.00 | | | | | | 2.5 |
| 3.0 | 50.00 | 35.00 | 20.30 | 35.00 | 20.30 | 20.30 | 16.80 | 14.00 | 12.00 | 11.00 | 10.00 | | | | 3.0 |
| 3.5 | 42.00 | 35.00 | 20.30 | 35.00 | 20.30 | 20.30 | 16.80 | 14.00 | 12.00 | 11.00 | 10.00 | 7.60 | 7.60 | 7.20 | 3.5 |
| 4.0 | 39.20 | 35.00 | 20.30 | 34.50 | 20.30 | 20.30 | 16.80 | 14.00 | 12.00 | 11.00 | 10.00 | 7.60 | 7.60 | 7.20 | 4.0 |
| 4.5 | 36.60 | 34.70 | 20.30 | 32.50 | 20.30 | 20.30 | 16.80 | 14.00 | 12.00 | 11.00 | 10.00 | 7.60 | 7.60 | 7.20 | 4.5 |
| 5.0 | 34.10 | 32.60 | 20.30 | 30.70 | 20.30 | 20.30 | 16.80 | 14.00 | 11.40 | 11.00 | 10.00 | 7.60 | 7.60 | 7.20 | 5.0 |
| 5.5 | 30.70 | 30.40 | 20.30 | 29.00 | 20.30 | 20.30 | 16.80 | 14.00 | 10.80 | 11.00 | 10.00 | 7.60 | 7.60 | 7.20 | 5.5 |
| 6.0 | 27.70 | 27.50 | 20.30 | 27.20 | 20.30 | 19.90 | 16.60 | 14.00 | 10.30 | 11.00 | 10.00 | 7.60 | 7.60 | 7.20 | 6.0 |
| 6.5 | 25.20 | 24.90 | 20.30 | 24.70 | 20.30 | 19.00 | 15.80 | 14.00 | 9.80 | 11.00 | 10.00 | 7.60 | 7.60 | 7.20 | 6.5 |
| 7.0 | 23.10 | 22.80 | 20.30 | 22.60 | 20.30 | 18.20 | 15.00 | 13.80 | 9.40 | 11.00 | 9.80 | 7.60 | 7.60 | 7.20 | 7.0 |
| 8.0 | | 19.20 | 20.30 | 19.00 | 20.30 | 16.80 | 13.70 | 12.90 | 8.60 | 11.00 | 9.00 | 7.60 | 7.60 | 7.20 | 8.0 |
| 9.0 | | 15.70 | 17.10 | 15.40 | 17.50 | 15.40 | 12.50 | 12.00 | 7.90 | 10.80 | 8.30 | 7.60 | 7.60 | 7.20 | 9.0 |
| 10.0 | | 12.50 | 14.00 | 12.20 | 14.50 | 13.50 | 11.50 | 11.20 | 7.30 | 10.10 | 7.70 | 7.60 | 7.60 | 7.20 | 10.0 |
| 11.0 | | 10.20 | 11.60 | 9.90 | 12.10 | 11.10 | 10.70 | 10.50 | 6.70 | 9.50 | 7.20 | 7.60 | 7.40 | 7.20 | 11.0 |
| 12.0 | | | | 8.20 | 10.20 | 9.30 | 10.00 | 9.70 | 6.30 | 9.00 | 6.70 | 7.60 | 7.00 | 7.10 | 12.0 |
| 14.0 | | | | 5.80 | 7.70 | 6.80 | 8.10 | 7.40 | 5.50 | 7.60 | 5.90 | 7.40 | 6.20 | 6.30 | 14.0 |
| 16.0 | | | | | | 5.10 | 6.40 | 5.70 | 4.90 | 5.80 | 5.30 | 5.90 | 5.50 | 5.60 | 16.0 |
| 18.0 | | | | | | 3.90 | 5.10 | 4.40 | 4.40 | 4.60 | 4.80 | 4.60 | 4.80 | 4.70 | 18.0 |
| 20.0 | | | | | | 3.00 | 4.20 | 3.50 | 4.00 | 3.60 | 4.00 | 3.70 | 3.80 | 3.70 | 20.0 |
| 22.0 | | | | | | 2.30 | 3.40 | 2.80 | 3.50 | 2.90 | 3.30 | 3.00 | 3.10 | 3.00 | 22.0 |
| 24.0 | | | | | | | | 2.20 | 3.00 | 2.30 | 2.70 | 2.40 | 2.50 | 2.40 | 24.0 |
| 26.0 | | | | | | | | 1.70 | 2.50 | 1.80 | 2.20 | 1.90 | 2.00 | 1.90 | 26.0 |
| 28.0 | | | | | | | | 1.30 | 2.10 | 1.40 | 1.80 | 1.50 | 1.60 | 1.50 | 28.0 |
| 30.0 | | | | | | | | 0.95 | 1.80 | 1.00 | 1.40 | 1.10 | 1.20 | 1.10 | 30.0 |
| 32.0 | | | | | | | | | | 0.75 | 1.10 | 0.85 | 0.95 | 0.85 | 32.0 |
| 34.0 | | | | | | | | | | 0.55 | 0.90 | 0.55 | 0.70 | 0.60 | 34.0 |
| 36.0 | | | | | | | | | | | | | 0.50 | | 36.0 |
| 38.0 | | | | | | | | | | | | | | | 38.0 |
| 1 | 0 | 50 | 0 | 100 | 0 | 100 | 0 | 100 | 0 | 100 | 50 | 100 | 84 | 100 | 1 |
| 2 | 0 | 0 | 16 | 0 | 33 | 33 | 66 | 68 | 100 | 83 | 100 | 95 | 100 | 100 | 2 |
| 3 | 0 | 0 | 16 | 0 | 33 | 33 | 66 | 68 | 100 | 83 | 100 | 95 | 100 | 100 | 3 |
| 4 | 0 | 0 | 16 | 0 | 33 | 33 | 66 | 68 | 100 | 83 | 100 | 95 | 100 | 100 | 4 |
| MODE | 1,2 | 1 | 2 | 1 | 2 | 1 | 2 | 1 | 2 | 1 | 2 | 1 | 2 | 1,2 | MODE |
| [DEG] | 0 - 83.5 | | | | | | | | | | | 18 - 83.5 | 4 - 83.5 | 25 - 83.5 | [DEG] |
| | *13/10 | 7 | 5 | 7 | 5 | 5 | 4 | 4 | 4 | 4 | 4 | 4 | 4 | 4 | |
| | Heavy load lifting device | 35 t | | | | | | | | | | | | | |

| MB | | | 7.2 m | 360 ° | JPN |
|---|---|---|---|---|---|

| m | 10.3 | 14.1 | 14.1 | 17.8 | 17.8 | 25.4 | 25.4 | 33.6 | 33.6 | 37.3 | 37.3 | 40.0 | 40.0 | 41.2 | m |
|---|---|---|---|---|---|---|---|---|---|---|---|---|---|---|---|
| 1.8 | * 55.40 | 35.00 | 20.30 | 35.00 | 20.30 | 20.30 | 16.80 | | | | | | | | 1.8 |
| 2.1 | * 52.50 | 35.00 | 20.30 | 35.00 | 20.30 | 20.30 | 16.80 | | | | | | | | 2.1 |
| 2.5 | 49.00 | 35.00 | 20.30 | 35.00 | 20.30 | 20.30 | 16.80 | 14.00 | 12.00 | | | | | | 2.5 |
| 3.0 | 45.30 | 35.00 | 20.30 | 35.00 | 20.30 | 20.30 | 16.80 | 14.00 | 12.00 | 11.00 | 10.00 | | | | 3.0 |
| 3.5 | 42.00 | 35.00 | 20.30 | 35.00 | 20.30 | 20.30 | 16.80 | 14.00 | 12.00 | 11.00 | 10.00 | 7.60 | 7.60 | 7.20 | 3.5 |
| 4.0 | 39.20 | 35.00 | 20.30 | 34.50 | 20.30 | 20.30 | 16.80 | 14.00 | 12.00 | 11.00 | 10.00 | 7.60 | 7.60 | 7.20 | 4.0 |
| 4.5 | 36.60 | 34.70 | 20.30 | 32.50 | 20.30 | 20.30 | 16.80 | 14.00 | 12.00 | 11.00 | 10.00 | 7.60 | 7.60 | 7.20 | 4.5 |
| 5.0 | 33.50 | 32.60 | 20.30 | 30.70 | 20.30 | 20.30 | 16.80 | 14.00 | 11.40 | 11.00 | 10.00 | 7.60 | 7.60 | 7.20 | 5.0 |
| 5.5 | 30.70 | 30.40 | 20.30 | 29.00 | 20.30 | 20.30 | 16.80 | 14.00 | 10.80 | 11.00 | 10.00 | 7.60 | 7.60 | 7.20 | 5.5 |
| 6.0 | 27.70 | 27.50 | 20.30 | 27.20 | 20.30 | 19.90 | 16.60 | 14.00 | 10.30 | 11.00 | 10.00 | 7.60 | 7.60 | 7.20 | 6.0 |
| 6.5 | 25.20 | 24.90 | 20.30 | 24.70 | 20.30 | 19.00 | 15.80 | 14.00 | 9.80 | 11.00 | 10.00 | 7.60 | 7.60 | 7.20 | 6.5 |
| 7.0 | 23.10 | 22.80 | 20.30 | 22.60 | 20.30 | 18.20 | 15.00 | 13.80 | 9.40 | 11.00 | 9.80 | 7.60 | 7.60 | 7.20 | 7.0 |
| 8.0 | | 18.20 | 19.90 | 17.80 | 20.30 | 16.80 | 13.70 | 12.90 | 8.60 | 11.00 | 9.00 | 7.60 | 7.60 | 7.20 | 8.0 |
| 9.0 | | 14.00 | 15.60 | 13.80 | 16.20 | 15.00 | 12.50 | 12.00 | 7.90 | 10.80 | 8.30 | 7.60 | 7.60 | 7.20 | 9.0 |
| 10.0 | | 11.20 | 12.60 | 10.90 | 13.20 | 12.20 | 11.50 | 11.20 | 7.30 | 10.10 | 7.70 | 7.60 | 7.60 | 7.20 | 10.0 |
| 11.0 | | 9.20 | 10.50 | 8.90 | 11.00 | 10.10 | 10.70 | 10.50 | 6.70 | 9.50 | 7.20 | 7.60 | 7.40 | 7.20 | 11.0 |
| 12.0 | | | | 7.30 | 9.30 | 8.50 | 9.80 | 9.10 | 6.30 | 9.00 | 6.70 | 7.60 | 7.00 | 7.10 | 12.0 |
| 14.0 | | | | 5.10 | 7.00 | 6.10 | 7.40 | 6.70 | 5.50 | 6.90 | 5.90 | 7.00 | 6.20 | 6.30 | 14.0 |
| 16.0 | | | | | | 4.60 | 5.80 | 5.10 | 4.90 | 5.30 | 5.30 | 5.40 | 5.50 | 5.40 | 16.0 |
| 18.0 | | | | | | 3.50 | 4.60 | 4.00 | 4.40 | 4.10 | 4.50 | 4.20 | 4.30 | 4.20 | 18.0 |
| 20.0 | | | | | | 2.60 | 3.80 | 3.10 | 3.90 | 3.20 | 3.60 | 3.30 | 3.40 | 3.30 | 20.0 |
| 22.0 | | | | | | 2.00 | 3.10 | 2.40 | 3.20 | 2.60 | 2.90 | 2.60 | 2.70 | 2.70 | 22.0 |
| 24.0 | | | | | | | | 1.90 | 2.70 | 2.00 | 2.40 | 2.10 | 2.20 | 2.10 | 24.0 |
| 26.0 | | | | | | | | 1.40 | 2.20 | 1.50 | 1.90 | 1.60 | 1.70 | 1.60 | 26.0 |
| 28.0 | | | | | | | | 1.00 | 1.90 | 1.10 | 1.50 | 1.20 | 1.30 | 1.20 | 28.0 |
| 30.0 | | | | | | | | 0.75 | 1.50 | 0.85 | 1.20 | 0.90 | 1.00 | 0.95 | 30.0 |
| 32.0 | | | | | | | | | | 0.55 | 0.95 | 0.60 | 0.75 | 0.65 | 32.0 |
| 34.0 | | | | | | | | | | | 0.70 | | 0.50 | | 34.0 |
| 36.0 | | | | | | | | | | | | | | | 36.0 |
| 38.0 | | | | | | | | | | | | | | | 38.0 |
| 1 | 0 | 50 | 0 | 100 | 0 | 100 | 0 | 100 | 0 | 100 | 50 | 100 | 84 | 100 | 1 |
| 2 | 0 | 0 | 16 | 0 | 33 | 33 | 66 | 68 | 100 | 83 | 100 | 95 | 100 | 100 | 2 |
| 3 | 0 | 0 | 16 | 0 | 33 | 33 | 66 | 68 | 100 | 83 | 100 | 95 | 100 | 100 | 3 |
| 4 | 0 | 0 | 16 | 0 | 33 | 33 | 66 | 68 | 100 | 83 | 100 | 95 | 100 | 100 | 4 |
| MODE | 1,2 | 1 | 2 | 1 | 2 | 1 | 2 | 1 | 2 | 1 | 2 | 1 | 2 | 1,2 | MODE |
| [DEG] | 0 - 83.5 | | | | | | | | | 12 - 83.5 | 0 - 83.5 | 27 - 83.5 | 18 - 83.5 | 33 - 83.5 | [DEG] |
| | *13/10 | 7 | 5 | 7 | 5 | 5 | 4 | 4 | 4 | 4 | 4 | 4 | 4 | 4 | |
| | Heavy load lifting device | 35 t | | | | | | | | | | | | | |

| MB | | | 6.5 m | 360 ° | JPN |
|---|---|---|---|---|---|

| m | 10.3 | 14.1 | 14.1 | 17.8 | 17.8 | 25.4 | 25.4 | 33.6 | 33.6 | 37.3 | 37.3 | 40.0 | 40.0 | 41.2 | m |
|---|---|---|---|---|---|---|---|---|---|---|---|---|---|---|---|
| 1.8 | * 55.40 | 35.00 | 20.30 | 35.00 | 20.30 | 20.30 | 16.80 | | | | | | | | 1.8 |
| 2.1 | * 52.50 | 35.00 | 20.30 | 35.00 | 20.30 | 20.30 | 16.80 | | | | | | | | 2.1 |
| 2.5 | 49.00 | 35.00 | 20.30 | 35.00 | 20.30 | 20.30 | 16.80 | 14.00 | 12.00 | | | | | | 2.5 |
| 3.0 | 45.30 | 35.00 | 20.30 | 35.00 | 20.30 | 20.30 | 16.80 | 14.00 | 12.00 | 11.00 | 10.00 | | | | 3.0 |
| 3.5 | 42.00 | 35.00 | 20.30 | 35.00 | 20.30 | 20.30 | 16.80 | 14.00 | 12.00 | 11.00 | 10.00 | 7.60 | 7.60 | 7.20 | 3.5 |
| 4.0 | 38.60 | 35.00 | 20.30 | 34.50 | 20.30 | 20.30 | 16.80 | 14.00 | 12.00 | 11.00 | 10.00 | 7.60 | 7.60 | 7.20 | 4.0 |
| 4.5 | 35.00 | 34.70 | 20.30 | 32.50 | 20.30 | 20.30 | 16.80 | 14.00 | 12.00 | 11.00 | 10.00 | 7.60 | 7.60 | 7.20 | 4.5 |
| 5.0 | 32.00 | 31.80 | 20.30 | 30.70 | 20.30 | 20.30 | 16.80 | 14.00 | 11.40 | 11.00 | 10.00 | 7.60 | 7.60 | 7.20 | 5.0 |
| 5.5 | 29.30 | 29.10 | 20.30 | 29.00 | 20.30 | 20.30 | 16.80 | 14.00 | 10.80 | 11.00 | 10.00 | 7.60 | 7.60 | 7.20 | 5.5 |
| 6.0 | 27.00 | 26.80 | 20.30 | 25.80 | 20.30 | 19.90 | 16.60 | 14.00 | 10.30 | 11.00 | 10.00 | 7.60 | 7.60 | 7.20 | 6.0 |
| 6.5 | 24.00 | 23.50 | 20.30 | 22.20 | 20.30 | 19.00 | 15.80 | 14.00 | 9.80 | 11.00 | 10.00 | 7.60 | 7.60 | 7.20 | 6.5 |
| 7.0 | 20.30 | 19.80 | 20.30 | 19.30 | 20.30 | 18.20 | 15.00 | 13.80 | 9.40 | 11.00 | 9.80 | 7.60 | 7.60 | 7.20 | 7.0 |
| 8.0 | | 14.80 | 16.40 | 14.50 | 17.00 | 15.20 | 13.70 | 12.90 | 8.60 | 11.00 | 9.00 | 7.60 | 7.60 | 7.20 | 8.0 |
| 9.0 | | 11.50 | 13.00 | 11.30 | 13.50 | 12.50 | 12.50 | 12.00 | 7.90 | 10.80 | 8.30 | 7.60 | 7.60 | 7.20 | 9.0 |
| 10.0 | | 9.20 | 10.60 | 9.00 | 11.10 | 10.20 | 11.50 | 10.50 | 7.30 | 10.10 | 7.70 | 7.60 | 7.60 | 7.20 | 10.0 |
| 11.0 | | 7.50 | 8.80 | 7.30 | 9.30 | 8.40 | 9.80 | 9.00 | 6.70 | 8.90 | 7.20 | 7.60 | 7.40 | 7.20 | 11.0 |
| 12.0 | | | | 6.00 | 7.90 | 7.00 | 8.40 | 7.60 | 6.30 | 7.70 | 6.70 | 7.60 | 7.00 | 7.10 | 12.0 |
| 14.0 | | | | 4.10 | 5.90 | 5.10 | 6.30 | 5.60 | 5.50 | 5.80 | 5.90 | 5.80 | 6.00 | 5.90 | 14.0 |
| 16.0 | | | | | | 3.70 | 4.90 | 4.20 | 4.90 | 4.40 | 4.80 | 4.50 | 4.60 | 4.50 | 16.0 |
| 18.0 | | | | | | 2.70 | 3.90 | 3.20 | 4.10 | 3.40 | 3.80 | 3.40 | 3.60 | 3.50 | 18.0 |
| 20.0 | | | | | | 2.00 | 3.10 | 2.50 | 3.30 | 2.60 | 3.00 | 2.70 | 2.80 | 2.70 | 20.0 |
| 22.0 | | | | | | 1.40 | 2.50 | 1.90 | 2.70 | 2.00 | 2.40 | 2.10 | 2.20 | 2.10 | 22.0 |
| 24.0 | | | | | | | | 1.40 | 2.20 | 1.50 | 1.90 | 1.60 | 1.70 | 1.60 | 24.0 |
| 26.0 | | | | | | | | 0.95 | 1.80 | 1.10 | 1.50 | 1.10 | 1.30 | 1.20 | 26.0 |
| 28.0 | | | | | | | | 0.60 | 1.40 | 0.75 | 1.10 | 0.80 | 0.95 | 0.85 | 28.0 |
| 30.0 | | | | | | | | | 1.20 | | 0.85 | 0.50 | 0.65 | 0.55 | 30.0 |
| 32.0 | | | | | | | | | | | 0.60 | | | | 32.0 |
| 34.0 | | | | | | | | | | | | | | | 34.0 |
| 36.0 | | | | | | | | | | | | | | | 36.0 |
| 38.0 | | | | | | | | | | | | | | | 38.0 |
| 1 | 0 | 50 | 0 | 100 | 0 | 100 | 0 | 100 | 0 | 100 | 50 | 100 | 84 | 100 | 1 |
| 2 | 0 | 0 | 16 | 0 | 33 | 33 | 66 | 68 | 100 | 83 | 100 | 95 | 100 | 100 | 2 |
| 3 | 0 | 0 | 16 | 0 | 33 | 33 | 66 | 68 | 100 | 83 | 100 | 95 | 100 | 100 | 3 |
| 4 | 0 | 0 | 16 | 0 | 33 | 33 | 66 | 68 | 100 | 83 | 100 | 95 | 100 | 100 | 4 |
| MODE | 1,2 | 1 | 2 | 1 | 2 | 1 | 2 | 1 | 2 | 1 | 2 | 1 | 2 | 1,2 | MODE |
| [DEG] | 0 - 83.5 | | | | | | | 15 - 83.5 | 0 - 83.5 | 26 - 83.5 | 12 - 83.5 | 33 - 83.5 | 33 - 83.5 | 35 - 83.5 | [DEG] |
| | *13/10 | 7 | 5 | 7 | 5 | 5 | 4 | 4 | 4 | 4 | 4 | 4 | 4 | 4 | |
| | Heavy load lifting device | 35 t | | | | | | | | | | | | | |

| MB | | | 5.28 m | 360 ° | JPN |
|---|---|---|---|---|---|

| m | 10.3 | 14.1 | 14.1 | 17.8 | 17.8 | 25.4 | 25.4 | 33.6 | 33.6 | 37.3 | 37.3 | 40.0 | 40.0 | 41.2 | m |
|---|---|---|---|---|---|---|---|---|---|---|---|---|---|---|---|
| 1.8 | * 55.40 | 35.00 | 20.30 | 35.00 | 20.30 | 20.30 | 16.80 | | | | | | | | 1.8 |
| 2.1 | * 52.50 | 35.00 | 20.30 | 35.00 | 20.30 | 20.30 | 16.80 | | | | | | | | 2.1 |
| 2.5 | 49.00 | 35.00 | 20.30 | 35.00 | 20.30 | 20.30 | 16.80 | 14.00 | 12.00 | | | | | | 2.5 |
| 3.0 | 44.00 | 35.00 | 20.30 | 35.00 | 20.30 | 20.30 | 16.80 | 14.00 | 12.00 | 11.00 | 10.00 | | | | 3.0 |
| 3.5 | 39.10 | 35.00 | 20.30 | 35.00 | 20.30 | 20.30 | 16.80 | 14.00 | 12.00 | 11.00 | 10.00 | 7.60 | 7.60 | 7.20 | 3.5 |
| 4.0 | 35.10 | 34.90 | 20.30 | 34.50 | 20.30 | 20.30 | 16.80 | 14.00 | 12.00 | 11.00 | 10.00 | 7.60 | 7.60 | 7.20 | 4.0 |
| 4.5 | 31.70 | 31.50 | 20.30 | 28.80 | 20.30 | 20.30 | 16.80 | 14.00 | 12.00 | 11.00 | 10.00 | 7.60 | 7.60 | 7.20 | 4.5 |
| 5.0 | 28.50 | 26.20 | 20.30 | 23.80 | 20.30 | 20.30 | 16.80 | 14.00 | 11.40 | 11.00 | 10.00 | 7.60 | 7.60 | 7.20 | 5.0 |
| 5.5 | 22.80 | 22.00 | 20.30 | 20.10 | 20.30 | 19.50 | 16.80 | 14.00 | 10.80 | 11.00 | 10.00 | 7.60 | 7.60 | 7.20 | 5.5 |
| 6.0 | 18.80 | 18.40 | 20.20 | 17.20 | 20.20 | 17.00 | 16.60 | 14.00 | 10.30 | 11.00 | 10.00 | 7.60 | 7.60 | 7.20 | 6.0 |
| 6.5 | 15.90 | 15.50 | 17.20 | 14.90 | 17.80 | 14.90 | 15.80 | 14.00 | 9.80 | 11.00 | 10.00 | 7.60 | 7.60 | 7.20 | 6.5 |
| 7.0 | 13.60 | 13.30 | 14.80 | 13.00 | 15.40 | 13.30 | 15.00 | 12.90 | 9.40 | 11.00 | 9.80 | 7.60 | 7.60 | 7.20 | 7.0 |
| 8.0 | | 10.00 | 11.40 | 9.80 | 12.00 | 10.70 | 12.40 | 10.60 | 8.60 | 10.40 | 9.00 | 7.60 | 7.60 | 7.20 | 8.0 |
| 9.0 | | 7.80 | 9.10 | 7.60 | 9.60 | 8.70 | 10.20 | 8.80 | 7.90 | 8.70 | 8.30 | 7.60 | 7.60 | 7.20 | 9.0 |
| 10.0 | | 6.20 | 7.40 | 6.00 | 7.90 | 7.10 | 8.40 | 7.40 | 7.30 | 7.40 | 7.70 | 7.40 | 7.50 | 7.20 | 10.0 |
| 11.0 | | 5.00 | 6.20 | 4.80 | 6.60 | 5.80 | 7.10 | 6.30 | 6.70 | 6.30 | 6.80 | 6.30 | 6.50 | 6.30 | 11.0 |
| 12.0 | | | | 3.80 | 5.60 | 4.80 | 6.00 | 5.30 | 6.30 | 5.40 | 5.90 | 5.40 | 5.60 | 5.40 | 12.0 |
| 14.0 | | | | 2.40 | 4.10 | 3.30 | 4.50 | 3.80 | 4.70 | 4.00 | 4.40 | 4.10 | 4.20 | 4.10 | 14.0 |
| 16.0 | | | | | | 2.30 | 3.40 | 2.80 | 3.60 | 2.90 | 3.30 | 3.00 | 3.10 | 3.00 | 16.0 |
| 18.0 | | | | | | 1.50 | 2.60 | 2.00 | 2.80 | 2.20 | 2.50 | 2.20 | 2.30 | 2.30 | 18.0 |
| 20.0 | | | | | | 0.95 | 2.00 | 1.40 | 2.20 | 1.60 | 1.90 | 1.60 | 1.70 | 1.70 | 20.0 |
| 22.0 | | | | | | 0.50 | 1.60 | 0.95 | 1.70 | 1.00 | 1.40 | 1.10 | 1.20 | 1.20 | 22.0 |
| 24.0 | | | | | | | | 0.55 | 1.30 | 0.65 | 1.00 | 0.75 | 0.85 | 0.75 | 24.0 |
| 26.0 | | | | | | | | | 1.00 | | 0.70 | | 0.50 | | 26.0 |
| 28.0 | | | | | | | | | 0.75 | | | | | | 28.0 |
| 30.0 | | | | | | | | | 0.50 | | | | | | 30.0 |
| 32.0 | | | | | | | | | | | | | | | 32.0 |
| 34.0 | | | | | | | | | | | | | | | 34.0 |
| 36.0 | | | | | | | | | | | | | | | 36.0 |
| 38.0 | | | | | | | | | | | | | | | 38.0 |
| 1 | 0 | 50 | 0 | 100 | 0 | 100 | 0 | 100 | 0 | 100 | 50 | 100 | 84 | 100 | 1 |
| 2 | 0 | 0 | 16 | 0 | 33 | 33 | 66 | 68 | 100 | 83 | 100 | 95 | 100 | 100 | 2 |
| 3 | 0 | 0 | 16 | 0 | 33 | 33 | 66 | 68 | 100 | 83 | 100 | 95 | 100 | 100 | 3 |
| 4 | 0 | 0 | 16 | 0 | 33 | 33 | 66 | 68 | 100 | 83 | 100 | 95 | 100 | 100 | 4 |
| MODE | 1,2 | 1 | 2 | 1 | 2 | 1 | 2 | 1 | 2 | 1 | 2 | 1 | 2 | 1,2 | MODE |
| [DEG] | 0 - 83.5 | | | | | 3 - 83.5 | 0 - 83.5 | 35 - 83.5 | 0 - 83.5 | 43 - 83.5 | 37 - 83.5 | 47 - 83.5 | 44 - 83.5 | 47 - 83.5 | [DEG] |
| | *13/10 | 7 | 5 | 7 | 5 | 5 | 4 | 4 | 4 | 4 | 4 | 4 | 4 | 4 | |
| | Heavy load lifting device | 35 t | | | | | | | | | | | | | |

| MB | | | 4.28 m | 360 ° | JPN |
|---|---|---|---|---|---|

| m | 10.3 | 14.1 | 14.1 | 17.8 | 17.8 | 25.4 | 25.4 | 33.6 | 33.6 | 37.3 | 37.3 | 40.0 | 40.0 | 41.2 | m |
|---|---|---|---|---|---|---|---|---|---|---|---|---|---|---|---|
| 1.8 | * 55.40 | 35.00 | 20.30 | 35.00 | 20.30 | 20.30 | 16.80 | | | | | | | | 1.8 |
| 2.1 | * 51.60 | 35.00 | 20.30 | 35.00 | 20.30 | 20.30 | 16.80 | | | | | | | | 2.1 |
| 2.5 | 45.90 | 35.00 | 20.30 | 35.00 | 20.30 | 20.30 | 16.80 | 14.00 | 12.00 | | | | | | 2.5 |
| 3.0 | 40.10 | 35.00 | 20.30 | 35.00 | 20.30 | 20.30 | 16.80 | 14.00 | 12.00 | 11.00 | 10.00 | | | | 3.0 |
| 3.5 | 35.40 | 33.20 | 20.30 | 29.50 | 20.30 | 20.30 | 16.80 | 14.00 | 12.00 | 11.00 | 10.00 | 7.60 | 7.60 | 7.20 | 3.5 |
| 4.0 | 29.60 | 26.20 | 20.30 | 23.50 | 20.30 | 20.30 | 16.80 | 14.00 | 12.00 | 11.00 | 10.00 | 7.60 | 7.60 | 7.20 | 4.0 |
| 4.5 | 23.50 | 21.30 | 20.30 | 19.30 | 20.30 | 18.50 | 16.80 | 14.00 | 12.00 | 11.00 | 10.00 | 7.60 | 7.60 | 7.20 | 4.5 |
| 5.0 | 18.70 | 17.70 | 19.70 | 16.20 | 19.20 | 15.80 | 16.80 | 14.00 | 11.40 | 11.00 | 10.00 | 7.60 | 7.60 | 7.20 | 5.0 |
| 5.5 | 15.40 | 15.00 | 16.70 | 13.70 | 16.60 | 13.70 | 15.60 | 13.10 | 10.80 | 11.00 | 10.00 | 7.60 | 7.60 | 7.20 | 5.5 |
| 6.0 | 12.90 | 12.50 | 14.10 | 11.80 | 14.50 | 12.00 | 13.80 | 11.60 | 10.30 | 11.00 | 10.00 | 7.60 | 7.60 | 7.20 | 6.0 |
| 6.5 | 11.00 | 10.60 | 12.10 | 10.20 | 12.60 | 10.60 | 12.30 | 10.40 | 9.80 | 10.20 | 10.00 | 7.60 | 7.60 | 7.20 | 6.5 |
| 7.0 | 9.40 | 9.10 | 10.50 | 8.80 | 11.00 | 9.40 | 11.10 | 9.30 | 9.40 | 9.20 | 9.70 | 7.60 | 7.60 | 7.20 | 7.0 |
| 8.0 | | 6.80 | 8.10 | 6.60 | 8.60 | 7.50 | 9.10 | 7.60 | 8.60 | 7.50 | 8.10 | 7.50 | 7.60 | 7.20 | 8.0 |
| 9.0 | | 5.30 | 6.50 | 5.00 | 6.90 | 6.10 | 7.40 | 6.30 | 7.40 | 6.20 | 6.80 | 6.20 | 6.40 | 6.20 | 9.0 |
| 10.0 | | 4.10 | 5.20 | 3.90 | 5.70 | 4.90 | 6.10 | 5.20 | 6.30 | 5.20 | 5.70 | 5.20 | 5.40 | 5.20 | 10.0 |
| 11.0 | | 3.20 | 4.30 | 2.90 | 4.70 | 3.90 | 5.10 | 4.40 | 5.40 | 4.40 | 4.90 | 4.40 | 4.60 | 4.40 | 11.0 |
| 12.0 | | | | 2.20 | 3.90 | 3.20 | 4.30 | 3.70 | 4.60 | 3.70 | 4.20 | 3.70 | 3.90 | 3.80 | 12.0 |
| 14.0 | | | | 1.10 | 2.80 | 2.00 | 3.20 | 2.50 | 3.40 | 2.60 | 3.10 | 2.70 | 2.80 | 2.70 | 14.0 |
| 16.0 | | | | | | 1.20 | 2.30 | 1.70 | 2.50 | 1.80 | 2.20 | 1.90 | 2.00 | 1.90 | 16.0 |
| 18.0 | | | | | | 0.60 | 1.70 | 1.10 | 1.90 | 1.20 | 1.60 | 1.30 | 1.40 | 1.30 | 18.0 |
| 20.0 | | | | | | | 1.20 | 0.60 | 1.40 | 0.75 | 1.10 | 0.80 | 0.95 | 0.85 | 20.0 |
| 22.0 | | | | | | | 0.85 | | 1.00 | | 0.70 | | | | 22.0 |
| 24.0 | | | | | | | | | 0.70 | | | | | | 24.0 |
| 26.0 | | | | | | | | | | | | | | | 26.0 |
| 28.0 | | | | | | | | | | | | | | | 28.0 |
| 30.0 | | | | | | | | | | | | | | | 30.0 |
| 32.0 | | | | | | | | | | | | | | | 32.0 |
| 34.0 | | | | | | | | | | | | | | | 34.0 |
| 36.0 | | | | | | | | | | | | | | | 36.0 |
| 38.0 | | | | | | | | | | | | | | | 38.0 |
| 1 | 0 | 50 | 0 | 100 | 0 | 100 | 0 | 100 | 0 | 100 | 50 | 100 | 84 | 100 | 1 |
| 2 | 0 | 0 | 16 | 0 | 33 | 33 | 66 | 68 | 100 | 83 | 100 | 95 | 100 | 100 | 2 |
| 3 | 0 | 0 | 16 | 0 | 33 | 33 | 66 | 68 | 100 | 83 | 100 | 95 | 100 | 100 | 3 |
| 4 | 0 | 0 | 16 | 0 | 33 | 33 | 66 | 68 | 100 | 83 | 100 | 95 | 100 | 100 | 4 |
| MODE | 1,2 | 1 | 2 | 1 | 2 | 1 | 2 | 1 | 2 | 1 | 2 | 1 | 2 | 1,2 | MODE |
| [DEG] | 0 - 83.5 | | | | | 31 - 83.5 | 0 - 83.5 | 46 - 83.5 | 34 - 83.5 | 51 - 83.5 | 47 - 83.5 | 55 - 83.5 | 55 - 83.5 | 54 - 83.5 | [DEG] |
| | *13/10 | 7 | 5 | 7 | 5 | 5 | 4 | 4 | 4 | 4 | 4 | 4 | 4 | 4 | |
| | Heavy load lifting device | 35 t | | | | | | | | | | | | | |

| MB | | | 2.36 m | 360 ° | JPN |
|---|---|---|---|---|---|

| m | 10.3 | 14.1 | 14.1 | 17.8 | 17.8 | 25.4 | 25.4 | 33.6 | 33.6 | 37.3 | 37.3 | 40.0 | 40.0 | 41.2 | m |
|---|---|---|---|---|---|---|---|---|---|---|---|---|---|---|---|
| 1.8 | 35.00 | 32.30 | 20.30 | 27.50 | 20.30 | 20.30 | 16.80 | | | | | | | | 1.8 |
| 2.1 | 30.60 | 26.00 | 20.30 | 22.50 | 20.30 | 19.90 | 16.80 | | | | | | | | 2.1 |
| 2.5 | 23.50 | 20.30 | 20.30 | 17.80 | 20.30 | 16.40 | 16.80 | 14.00 | 12.00 | | | | | | 2.5 |
| 3.0 | 17.80 | 15.50 | 17.50 | 13.80 | 16.80 | 13.20 | 15.10 | 12.10 | 12.00 | 11.00 | 10.00 | | | | 3.0 |
| 3.5 | 14.00 | 12.30 | 14.10 | 10.90 | 13.70 | 10.80 | 12.70 | 10.20 | 11.50 | 9.80 | 10.00 | 7.60 | 7.60 | 7.20 | 3.5 |
| 4.0 | 11.10 | 9.90 | 11.60 | 8.80 | 11.50 | 9.00 | 10.80 | 8.60 | 9.90 | 8.40 | 9.00 | 7.60 | 7.60 | 7.20 | 4.0 |
| 4.5 | 8.80 | 8.10 | 9.80 | 7.20 | 9.70 | 7.60 | 9.30 | 7.40 | 8.60 | 7.30 | 7.80 | 7.10 | 7.30 | 7.10 | 4.5 |
| 5.0 | 7.20 | 6.70 | 8.20 | 6.00 | 8.40 | 6.50 | 8.10 | 6.40 | 7.60 | 6.30 | 6.80 | 6.20 | 6.40 | 6.20 | 5.0 |
| 5.5 | 5.90 | 5.60 | 6.90 | 4.90 | 7.20 | 5.50 | 7.10 | 5.60 | 6.70 | 5.50 | 6.00 | 5.40 | 5.60 | 5.40 | 5.5 |
| 6.0 | 4.90 | 4.60 | 5.80 | 4.00 | 6.30 | 4.70 | 6.30 | 4.90 | 6.00 | 4.80 | 5.30 | 4.80 | 4.90 | 4.80 | 6.0 |
| 6.5 | 4.10 | 3.80 | 5.00 | 3.30 | 5.40 | 4.10 | 5.60 | 4.20 | 5.40 | 4.20 | 4.80 | 4.20 | 4.40 | 4.20 | 6.5 |
| 7.0 | 3.40 | 3.10 | 4.30 | 2.70 | 4.70 | 3.50 | 4.90 | 3.70 | 4.80 | 3.70 | 4.20 | 3.70 | 3.90 | 3.70 | 7.0 |
| 8.0 | | 2.10 | 3.20 | 1.70 | 3.60 | 2.50 | 3.90 | 2.80 | 3.90 | 2.90 | 3.40 | 2.90 | 3.00 | 2.90 | 8.0 |
| 9.0 | | 1.30 | 2.30 | 0.95 | 2.70 | 1.80 | 3.20 | 2.10 | 3.20 | 2.20 | 2.70 | 2.20 | 2.40 | 2.30 | 9.0 |
| 10.0 | | 0.70 | 1.70 | | 2.10 | 1.20 | 2.50 | 1.60 | 2.60 | 1.70 | 2.10 | 1.70 | 1.80 | 1.70 | 10.0 |
| 11.0 | | | 1.20 | | 1.60 | 0.70 | 2.00 | 1.10 | 2.10 | 1.20 | 1.70 | 1.30 | 1.40 | 1.30 | 11.0 |
| 12.0 | | | | | 1.20 | | 1.50 | 0.75 | 1.70 | 0.85 | 1.30 | 0.90 | 1.00 | 0.90 | 12.0 |
| 14.0 | | | | | 0.55 | | 0.90 | | 1.00 | | 0.65 | | | | 14.0 |
| 16.0 | | | | | | | | | 0.55 | | | | | | 16.0 |
| 18.0 | | | | | | | | | | | | | | | 18.0 |
| 20.0 | | | | | | | | | | | | | | | 20.0 |
| 22.0 | | | | | | | | | | | | | | | 22.0 |
| 24.0 | | | | | | | | | | | | | | | 24.0 |
| 26.0 | | | | | | | | | | | | | | | 26.0 |
| 28.0 | | | | | | | | | | | | | | | 28.0 |
| 30.0 | | | | | | | | | | | | | | | 30.0 |
| 32.0 | | | | | | | | | | | | | | | 32.0 |
| 34.0 | | | | | | | | | | | | | | | 34.0 |
| 36.0 | | | | | | | | | | | | | | | 36.0 |
| 38.0 | | | | | | | | | | | | | | | 38.0 |
| 1 | 0 | 50 | 0 | 100 | 0 | 100 | 0 | 100 | 0 | 100 | 50 | 100 | 84 | 100 | 1 |
| 2 | 0 | 0 | 16 | 0 | 33 | 33 | 66 | 68 | 100 | 83 | 100 | 95 | 100 | 100 | 2 |
| 3 | 0 | 0 | 16 | 0 | 33 | 33 | 66 | 68 | 100 | 83 | 100 | 95 | 100 | 100 | 3 |
| 4 | 0 | 0 | 16 | 0 | 33 | 33 | 66 | 68 | 100 | 83 | 100 | 95 | 100 | 100 | 4 |
| MODE | 1,2 | 1 | 2 | 1 | 2 | 1 | 2 | 1 | 2 | 1 | 2 | 1 | 2 | 1,2 | MODE |
| [DEG] | 0 - 83.5 | 13 - 83.5 | 0 - 83.5 | 45 - 83.5 | 4 - 83.5 | 56 - 83.5 | 42 - 83.5 | 63 - 83.5 | 57 - 83.5 | 67 - 83.5 | 64 - 83.5 | 69 - 83.5 | 69 - 83.5 | 70 - 83.5 | [DEG] |
| | 7 | 7 | 5 | 7 | 5 | 5 | 4 | 4 | 4 | 4 | 4 | 4 | 4 | 4 | |
| | 35 t | | | | | | | | | | | | | | |

## ■Jib rated lifting capacity table

| FAJ | 8.5 m | | Smart Chart | JPN |
|---|---|---|---|---|

| m | 10.3 | 10.3 | 10.3 | 10.3 | 33.6 | 33.6 | 33.6 | 33.6 | 33.6 | 33.6 | 33.6 | 33.6 | 37.3 | 37.3 | 37.3 | 37.3 | 37.3 | 37.3 | 37.3 | 37.3 | m |
|---|---|---|---|---|---|---|---|---|---|---|---|---|---|---|---|---|---|---|---|---|---|
| ° | 5 | 25 | 45 | 60 | 5 | 25 | 45 | 60 | 5 | 25 | 45 | 60 | 5 | 25 | 45 | 60 | 5 | 25 | 45 | 60 | ° |
| 2.0 | 4.20 | | | | | | | | | | | | | | | | | | | | 2.0 |
| 3.0 | 4.20 | | | | | | | | | | | | | | | | | | | | 3.0 |
| 3.5 | 4.20 | | | | | | | | | | | | | | | | | | | | 3.5 |
| 4.0 | 4.20 | | | | | | | | | | | | | | | | | | | | 4.0 |
| 4.5 | 4.20 | 4.20 | | | 4.20 | | | | | | | | | | | | | | | | 4.5 |
| 5.0 | 4.20 | 4.20 | | | 4.20 | | | | 4.20 | | | | | | | | | | | | 5.0 |
| 5.5 | 4.20 | 4.20 | | | 4.20 | | | | 4.20 | | | | 4.20 | | | | 4.20 | | | | 5.5 |
| 6.0 | 4.20 | 4.20 | | | 4.20 | | | | 4.20 | | | | 4.20 | | | | 4.20 | | | | 6.0 |
| 6.5 | 4.20 | 4.20 | 3.00 | | 4.20 | | | | 4.20 | | | | 4.20 | | | | 4.20 | | | | 6.5 |
| 7.0 | 4.20 | 4.20 | 2.90 | | 4.20 | | | | 4.20 | | | | 4.20 | | | | 4.20 | | | | 7.0 |
| 8.0 | 4.20 | 3.95 | 2.75 | 1.70 | 4.20 | 4.20 | | | 4.20 | 4.20 | | | 4.20 | | | | 4.20 | | | | 8.0 |
| 9.0 | 4.20 | 3.75 | 2.60 | 1.65 | 4.20 | 4.20 | | | 4.20 | 4.20 | | | 4.20 | 4.20 | | | 4.20 | 4.20 | | | 9.0 |
| 10.0 | 4.20 | 3.50 | 2.50 | 1.60 | 4.20 | 4.20 | 2.85 | | 4.20 | 4.20 | | | 4.20 | 4.20 | | | 4.20 | 4.20 | | | 10.0 |
| 11.0 | 3.95 | 3.30 | 2.45 | 1.60 | 4.20 | 4.20 | 2.75 | 1.65 | 4.20 | 4.10 | 2.75 | 1.65 | 4.20 | 4.20 | 2.80 | | 4.20 | 4.20 | 2.75 | | 11.0 |
| 12.0 | 3.70 | 3.15 | 2.35 | | 4.20 | 4.00 | 2.70 | 1.65 | 4.20 | 3.85 | 2.70 | 1.65 | 4.20 | 4.10 | 2.70 | 1.65 | 4.20 | 4.00 | 2.70 | 1.65 | 12.0 |
| 13.0 | 3.45 | 3.00 | 2.35 | | 4.20 | 3.85 | 2.65 | 1.60 | 4.20 | 3.65 | 2.65 | 1.60 | 4.20 | 3.95 | 2.65 | 1.60 | 4.20 | 3.75 | 2.65 | 1.60 | 13.0 |
| 14.0 | 3.25 | 2.90 | | | 4.20 | 3.70 | 2.60 | 1.60 | 4.05 | 3.45 | 2.60 | 1.60 | 4.20 | 3.80 | 2.60 | 1.60 | 4.20 | 3.60 | 2.60 | 1.60 | 14.0 |
| 16.0 | | | | | 4.20 | 3.45 | 2.45 | 1.55 | 3.50 | 3.10 | 2.45 | 1.55 | 4.20 | 3.55 | 2.50 | 1.55 | 4.20 | 3.25 | 2.50 | 1.55 | 16.0 |
| 18.0 | | | | | 4.20 | 3.20 | 2.35 | 1.55 | 3.00 | 2.80 | 2.35 | 1.55 | 4.20 | 3.30 | 2.40 | 1.55 | 3.45 | 2.95 | 2.40 | 1.55 | 18.0 |
| 20.0 | | | | | 3.85 | 3.00 | 2.25 | 1.50 | 2.65 | 2.50 | 2.25 | 1.50 | 3.90 | 3.10 | 2.30 | 1.50 | 2.90 | 2.70 | 2.30 | 1.50 | 20.0 |
| 22.0 | | | | | 3.30 | 2.85 | 2.15 | 1.50 | 2.30 | 2.20 | 2.15 | 1.50 | 3.35 | 2.90 | 2.20 | 1.50 | 2.55 | 2.40 | 2.20 | 1.50 | 22.0 |
| 24.0 | | | | | 2.60 | 2.70 | 2.10 | | 2.05 | 1.95 | 1.90 | | 2.60 | 2.75 | 2.10 | 1.50 | 2.25 | 2.15 | 2.05 | 1.45 | 24.0 |
| 26.0 | | | | | 2.00 | 2.25 | 2.05 | | 1.80 | 1.75 | 1.70 | | 2.05 | 2.30 | 2.05 | | 2.00 | 1.90 | 1.85 | | 26.0 |
| 28.0 | | | | | 1.50 | 1.70 | 1.85 | | 1.55 | 1.55 | 1.50 | | 1.55 | 1.75 | 1.90 | | 1.80 | 1.70 | 1.65 | | 28.0 |
| 30.0 | | | | | 1.10 | 1.30 | | | 1.40 | 1.35 | | | 1.15 | 1.35 | 1.45 | | 1.45 | 1.55 | 1.50 | | 30.0 |
| 32.0 | | | | | 0.75 | 0.90 | | | 1.20 | 1.20 | | | 0.80 | 0.95 | 1.05 | | 1.10 | 1.25 | 1.30 | | 32.0 |
| 34.0 | | | | | 0.45 | 0.55 | | | 1.05 | 1.05 | | | 0.50 | 0.65 | | | 0.80 | 0.95 | | | 34.0 |
| 36.0 | | | | | | | | | 0.85 | 0.90 | | | | | | | 0.55 | 0.65 | | | 36.0 |
| 38.0 | | | | | | | | | | | | | | | | | | 0.35 | | | 38.0 |
| 40.0 | | | | | | | | | | | | | | | | | | | | | 40.0 |
| 42.0 | | | | | | | | | | | | | | | | | | | | | 42.0 |
| 1 | 0 | 0 | 0 | 0 | 100 | 100 | 100 | 100 | 0 | 0 | 0 | 0 | 100 | 100 | 100 | 100 | 50 | 50 | 50 | 50 | 1 |
| 2 | 0 | 0 | 0 | 0 | 68 | 68 | 68 | 68 | 100 | 100 | 100 | 100 | 83 | 83 | 83 | 83 | 100 | 100 | 100 | 100 | 2 |
| 3 | 0 | 0 | 0 | 0 | 68 | 68 | 68 | 68 | 100 | 100 | 100 | 100 | 83 | 83 | 83 | 83 | 100 | 100 | 100 | 100 | 3 |
| 4 | 0 | 0 | 0 | 0 | 68 | 68 | 68 | 68 | 100 | 100 | 100 | 100 | 83 | 83 | 83 | 83 | 100 | 100 | 100 | 100 | 4 |
| MODE | 1,2 | | | | 1 | | | | 2 | | | | 1 | | | | 2 | | | | MODE |
| [DEG] | 30 - 83.5 | 38 - 83.5 | 49 - 83.5 | 63 - 83.5 | 33 - 83.5 | 36 - 83.5 | 52 - 83.5 | 64 - 83.5 | 27 - 83.5 | 30 - 83.5 | 53 - 83.5 | 65 - 83.5 | 41 - 83.5 | 44 - 83.5 | 50 - 83.5 | 64 - 83.5 | 37 - 83.5 | 35 - 83.5 | 50 - 83.5 | 64 - 83.5 | [DEG] |

| m | 40.0 | 40.0 | 40.0 | 40.0 | 40.0 | 40.0 | 40.0 | 40.0 | 41.2 | 41.2 | 41.2 | 41.2 | | | | | | | | | m |
|---|---|---|---|---|---|---|---|---|---|---|---|---|---|---|---|---|---|---|---|---|---|
| ° | 5 | 25 | 45 | 60 | 5 | 25 | 45 | 60 | 5 | 25 | 45 | 60 | | | | | | | | | ° |
| 2.0 | | | | | | | | | | | | | | | | | | | | | 2.0 |
| 3.0 | | | | | | | | | | | | | | | | | | | | | 3.0 |
| 3.5 | | | | | | | | | | | | | | | | | | | | | 3.5 |
| 4.0 | | | | | | | | | | | | | | | | | | | | | 4.0 |
| 4.5 | | | | | | | | | | | | | | | | | | | | | 4.5 |
| 5.0 | | | | | | | | | | | | | | | | | | | | | 5.0 |
| 5.5 | | | | | | | | | | | | | | | | | | | | | 5.5 |
| 6.0 | 4.00 | | | | 4.00 | | | | 3.80 | | | | | | | | | | | | 6.0 |
| 6.5 | 4.00 | | | | 4.00 | | | | 3.80 | | | | | | | | | | | | 6.5 |
| 7.0 | 4.00 | | | | 4.00 | | | | 3.80 | | | | | | | | | | | | 7.0 |
| 8.0 | 4.00 | | | | 4.00 | | | | 3.80 | | | | | | | | | | | | 8.0 |
| 9.0 | 4.00 | | | | 4.00 | | | | 3.80 | | | | | | | | | | | | 9.0 |
| 10.0 | 4.00 | 4.00 | | | 4.00 | 4.00 | | | 3.80 | 3.80 | | | | | | | | | | | 10.0 |
| 11.0 | 4.00 | 4.00 | | | 4.00 | 4.00 | | | 3.80 | 3.80 | | | | | | | | | | | 11.0 |
| 12.0 | 4.00 | 4.00 | 2.70 | 1.65 | 4.00 | 4.00 | 2.70 | 1.65 | 3.80 | 3.80 | 2.75 | | | | | | | | | | 12.0 |
| 13.0 | 4.00 | 4.00 | 2.65 | 1.60 | 4.00 | 3.85 | 2.65 | 1.60 | 3.80 | 3.80 | 2.65 | 1.60 | | | | | | | | | 13.0 |
| 14.0 | 4.00 | 3.85 | 2.60 | 1.60 | 4.00 | 3.65 | 2.60 | 1.60 | 3.80 | 3.70 | 2.60 | 1.60 | | | | | | | | | 14.0 |
| 16.0 | 4.00 | 3.60 | 2.50 | 1.55 | 3.95 | 3.30 | 2.50 | 1.55 | 3.80 | 3.35 | 2.50 | 1.55 | | | | | | | | | 16.0 |
| 18.0 | 4.00 | 3.35 | 2.40 | 1.55 | 3.45 | 3.05 | 2.40 | 1.55 | 3.55 | 3.05 | 2.40 | 1.55 | | | | | | | | | 18.0 |
| 20.0 | 3.75 | 3.15 | 2.30 | 1.50 | 3.05 | 2.80 | 2.30 | 1.50 | 3.10 | 2.80 | 2.30 | 1.50 | | | | | | | | | 20.0 |
| 22.0 | 3.20 | 2.95 | 2.20 | 1.50 | 2.70 | 2.50 | 2.20 | 1.50 | 2.80 | 2.55 | 2.20 | 1.50 | | | | | | | | | 22.0 |
| 24.0 | 2.65 | 2.80 | 2.10 | 1.45 | 2.40 | 2.25 | 2.10 | 1.45 | 2.50 | 2.30 | 2.15 | 1.45 | | | | | | | | | 24.0 |
| 26.0 | 2.05 | 2.30 | 2.05 | | 2.15 | 2.05 | 1.95 | | 2.05 | 2.10 | 2.00 | 1.45 | | | | | | | | | 26.0 |
| 28.0 | 1.55 | 1.80 | 1.95 | | 1.65 | 1.85 | 1.75 | | 1.60 | 1.80 | 1.80 | | | | | | | | | | 28.0 |
| 30.0 | 1.15 | 1.35 | 1.50 | | 1.25 | 1.45 | 1.55 | | 1.20 | 1.40 | 1.50 | | | | | | | | | | 30.0 |
| 32.0 | 0.85 | 1.00 | 1.10 | | 0.90 | 1.10 | 1.15 | | 0.85 | 1.00 | 1.10 | | | | | | | | | | 32.0 |
| 34.0 | 0.50 | 0.70 | 0.75 | | 0.60 | 0.75 | 0.80 | | 0.55 | 0.70 | 0.75 | | | | | | | | | | 34.0 |
| 36.0 | | | | | | 0.45 | | | | | | | | | | | | | | | 36.0 |
| 38.0 | | | | | | | | | | | | | | | | | | | | | 38.0 |
| 40.0 | | | | | | | | | | | | | | | | | | | | | 40.0 |
| 42.0 | | | | | | | | | | | | | | | | | | | | | 42.0 |
| 1 | 100 | 100 | 100 | 100 | 84 | 84 | 84 | 84 | 100 | 100 | 100 | 100 | | | | | | | | | 1 |
| 2 | 95 | 95 | 95 | 95 | 100 | 100 | 100 | 100 | 100 | 100 | 100 | 100 | | | | | | | | | 2 |
| 3 | 95 | 95 | 95 | 95 | 100 | 100 | 100 | 100 | 100 | 100 | 100 | 100 | | | | | | | | | 3 |
| 4 | 95 | 95 | 95 | 95 | 100 | 100 | 100 | 100 | 100 | 100 | 100 | 100 | | | | | | | | | 4 |
| MODE | 1 | | | | 2 | | | | 1,2 | | | | | | | | | | | | MODE |
| [DEG] | 45 - 83.5 | 48 - 83.5 | 50 - 83.5 | 67 - 83.5 | 44 - 83.5 | 45 - 83.5 | 50 - 83.5 | 67 - 83.5 | 47 - 83.5 | 50 - 83.5 | 52 - 83.5 | 64 - 83.5 | | | | | | | | | [DEG] |

| FAJ | 13.7 m | | Smart Chart | JPN |
|---|---|---|---|---|

| m | 10.3 | 10.3 | 10.3 | 10.3 | 33.6 | 33.6 | 33.6 | 33.6 | 33.6 | 33.6 | 33.6 | 33.6 | 37.3 | 37.3 | 37.3 | 37.3 | 37.3 | 37.3 | 37.3 | 37.3 | m |
|---|---|---|---|---|---|---|---|---|---|---|---|---|---|---|---|---|---|---|---|---|---|
| ° | 5 | 25 | 45 | 60 | 5 | 25 | 45 | 60 | 5 | 25 | 45 | 60 | 5 | 25 | 45 | 60 | 5 | 25 | 45 | 60 | ° |
| 2.0 | | | | | | | | | | | | | | | | | | | | | 2.0 |
| 3.0 | 3.20 | | | | | | | | | | | | | | | | | | | | 3.0 |
| 3.5 | 3.20 | | | | | | | | | | | | | | | | | | | | 3.5 |
| 4.0 | 3.20 | | | | | | | | | | | | | | | | | | | | 4.0 |
| 4.5 | 3.20 | | | | | | | | | | | | | | | | | | | | 4.5 |
| 5.0 | 3.20 | | | | | | | | | | | | | | | | | | | | 5.0 |
| 5.5 | 3.20 | | | | | | | | | | | | | | | | | | | | 5.5 |
| 6.0 | 3.20 | | | | 3.20 | | | | 3.00 | | | | | | | | | | | | 6.0 |
| 6.5 | 3.20 | | | | 3.20 | | | | 3.00 | | | | 3.00 | | | | 2.90 | | | | 6.5 |
| 7.0 | 3.20 | | | | 3.20 | | | | 3.00 | | | | 3.00 | | | | 2.90 | | | | 7.0 |
| 8.0 | 3.05 | 2.35 | | | 3.20 | | | | 3.00 | | | | 3.00 | | | | 2.90 | | | | 8.0 |
| 9.0 | 2.75 | 2.20 | | | 3.20 | | | | 3.00 | | | | 3.00 | | | | 2.90 | | | | 9.0 |
| 10.0 | 2.55 | 2.05 | | | 3.20 | | | | 3.00 | | | | 3.00 | | | | 2.90 | | | | 10.0 |
| 11.0 | 2.35 | 1.90 | | | 3.20 | | | | 3.00 | | | | 3.00 | | | | 2.90 | | | | 11.0 |
| 12.0 | 2.15 | 1.80 | 1.55 | | 3.20 | 2.20 | | | 3.00 | 2.20 | | | 3.00 | 2.25 | | | 2.90 | 2.20 | | | 12.0 |
| 13.0 | 2.00 | 1.70 | 1.50 | 0.90 | 3.10 | 2.15 | | | 3.00 | 2.15 | | | 3.00 | 2.15 | | | 2.90 | 2.15 | | | 13.0 |
| 14.0 | 1.85 | 1.65 | 1.45 | 0.90 | 2.95 | 2.10 | | | 2.95 | 2.10 | | | 3.00 | 2.10 | | | 2.90 | 2.10 | | | 14.0 |
| 16.0 | 1.65 | 1.50 | 1.35 | 0.85 | 2.70 | 1.95 | 1.50 | | 2.70 | 1.95 | 1.50 | | 2.80 | 2.00 | 1.50 | | 2.80 | 2.00 | 1.50 | | 16.0 |
| 18.0 | 1.50 | 1.40 | 1.30 | | 2.55 | 1.85 | 1.40 | 0.85 | 2.50 | 1.85 | 1.40 | 0.85 | 2.60 | 1.90 | 1.45 | 0.85 | 2.60 | 1.90 | 1.45 | 0.85 | 18.0 |
| 20.0 | 1.35 | 1.30 | | | 2.35 | 1.75 | 1.35 | 0.85 | 2.35 | 1.75 | 1.35 | 0.80 | 2.40 | 1.80 | 1.35 | 0.85 | 2.40 | 1.80 | 1.35 | 0.85 | 20.0 |
| 22.0 | | | | | 2.20 | 1.65 | 1.25 | 0.80 | 2.20 | 1.65 | 1.25 | 0.80 | 2.30 | 1.70 | 1.30 | 0.80 | 2.25 | 1.70 | 1.30 | 0.80 | 22.0 |
| 24.0 | | | | | 2.10 | 1.60 | 1.20 | 0.80 | 1.95 | 1.60 | 1.20 | 0.80 | 2.15 | 1.65 | 1.20 | 0.80 | 2.10 | 1.65 | 1.20 | 0.80 | 24.0 |
| 26.0 | | | | | 1.95 | 1.50 | 1.15 | 0.80 | 1.70 | 1.50 | 1.15 | 0.80 | 2.05 | 1.55 | 1.15 | 0.80 | 1.90 | 1.55 | 1.15 | 0.80 | 26.0 |
| 28.0 | | | | | 1.80 | 1.45 | 1.10 | 0.80 | 1.50 | 1.45 | 1.10 | 0.80 | 1.90 | 1.50 | 1.10 | 0.75 | 1.70 | 1.50 | 1.10 | 0.75 | 28.0 |
| 30.0 | | | | | 1.55 | 1.35 | 1.05 | | 1.35 | 1.35 | 1.05 | | 1.55 | 1.40 | 1.05 | 0.75 | 1.50 | 1.40 | 1.05 | 0.75 | 30.0 |
| 32.0 | | | | | 1.20 | 1.30 | 1.00 | | 1.20 | 1.20 | 1.00 | | 1.20 | 1.30 | 1.00 | | 1.35 | 1.30 | 1.00 | | 32.0 |
| 34.0 | | | | | 0.90 | 1.15 | 0.95 | | 1.05 | 1.05 | 0.95 | | 0.90 | 1.15 | 1.00 | | 1.20 | 1.20 | 1.00 | | 34.0 |
| 36.0 | | | | | 0.65 | 0.85 | | | 0.95 | 0.95 | | | 0.65 | 0.85 | 0.95 | | 0.90 | 1.05 | 0.95 | | 36.0 |
| 38.0 | | | | | 0.40 | 0.55 | | | 0.85 | 0.85 | | | 0.40 | 0.60 | | | 0.70 | 0.85 | 0.90 | | 38.0 |
| 40.0 | | | | | | | | | 0.75 | 0.75 | | | | | | | 0.50 | 0.60 | | | 40.0 |
| 42.0 | | | | | | | | | 0.55 | | | | | | | | | 0.40 | | | 42.0 |
| 1 | 0 | 0 | 0 | 0 | 100 | 100 | 100 | 100 | 0 | 0 | 0 | 0 | 100 | 100 | 100 | 100 | 50 | 50 | 50 | 50 | 1 |
| 2 | 0 | 0 | 0 | 0 | 68 | 68 | 68 | 68 | 100 | 100 | 100 | 100 | 83 | 83 | 83 | 83 | 100 | 100 | 100 | 100 | 2 |
| 3 | 0 | 0 | 0 | 0 | 68 | 68 | 68 | 68 | 100 | 100 | 100 | 100 | 83 | 83 | 83 | 83 | 100 | 100 | 100 | 100 | 3 |
| 4 | 0 | 0 | 0 | 0 | 68 | 68 | 68 | 68 | 100 | 100 | 100 | 100 | 83 | 83 | 83 | 83 | 100 | 100 | 100 | 100 | 4 |
| MODE | 1,2 | | | | 1 | | | | 2 | | | | 1 | | | | 2 | | | | MODE |
| [DEG] | 23 - 83.5 | 35 - 83.5 | 54 - 83.5 | 67 - 83.5 | 36 - 83.5 | 42 - 83.5 | 53 - 83.5 | 64 - 83.5 | 25 - 83.5 | 38 - 83.5 | 53 - 83.5 | 65 - 83.5 | 43 - 83.5 | 48 - 83.5 | 54 - 83.5 | 64 - 83.5 | 39 - 83.5 | 41 - 83.5 | 51 - 83.5 | 64 - 83.5 | [DEG] |

| m | 40.0 | 40.0 | 40.0 | 40.0 | 40.0 | 40.0 | 40.0 | 40.0 | 41.2 | 41.2 | 41.2 | 41.2 | | | | | | | | | m |
|---|---|---|---|---|---|---|---|---|---|---|---|---|---|---|---|---|---|---|---|---|---|
| ° | 5 | 25 | 45 | 60 | 5 | 25 | 45 | 60 | 5 | 25 | 45 | 60 | | | | | | | | | ° |
| 2.0 | | | | | | | | | | | | | | | | | | | | | 2.0 |
| 3.0 | | | | | | | | | | | | | | | | | | | | | 3.0 |
| 3.5 | | | | | | | | | | | | | | | | | | | | | 3.5 |
| 4.0 | | | | | | | | | | | | | | | | | | | | | 4.0 |
| 4.5 | | | | | | | | | | | | | | | | | | | | | 4.5 |
| 5.0 | | | | | | | | | | | | | | | | | | | | | 5.0 |
| 5.5 | | | | | | | | | | | | | | | | | | | | | 5.5 |
| 6.0 | | | | | | | | | | | | | | | | | | | | | 6.0 |
| 6.5 | | | | | | | | | | | | | | | | | | | | | 6.5 |
| 7.0 | 3.00 | | | | 2.80 | | | | 2.50 | | | | | | | | | | | | 7.0 |
| 8.0 | 3.00 | | | | 2.80 | | | | 2.50 | | | | | | | | | | | | 8.0 |
| 9.0 | 3.00 | | | | 2.80 | | | | 2.50 | | | | | | | | | | | | 9.0 |
| 10.0 | 3.00 | | | | 2.80 | | | | 2.50 | | | | | | | | | | | | 10.0 |
| 11.0 | 3.00 | | | | 2.80 | | | | 2.50 | | | | | | | | | | | | 11.0 |
| 12.0 | 3.00 | | | | 2.80 | | | | 2.50 | | | | | | | | | | | | 12.0 |
| 13.0 | 3.00 | 2.15 | | | 2.80 | 2.15 | | | 2.50 | 2.15 | | | | | | | | | | | 13.0 |
| 14.0 | 3.00 | 2.10 | | | 2.80 | 2.10 | | | 2.50 | 2.10 | | | | | | | | | | | 14.0 |
| 16.0 | 2.85 | 2.00 | | | 2.80 | 2.00 | | | 2.50 | 2.00 | | | | | | | | | | | 16.0 |
| 18.0 | 2.65 | 1.90 | 1.45 | 0.85 | 2.65 | 1.90 | 1.45 | 0.85 | 2.50 | 1.90 | 1.45 | 0.85 | | | | | | | | | 18.0 |
| 20.0 | 2.45 | 1.80 | 1.40 | 0.85 | 2.45 | 1.80 | 1.40 | 0.85 | 2.50 | 1.80 | 1.40 | 0.85 | | | | | | | | | 20.0 |
| 22.0 | 2.30 | 1.75 | 1.30 | 0.80 | 2.30 | 1.75 | 1.30 | 0.80 | 2.35 | 1.75 | 1.30 | 0.80 | | | | | | | | | 22.0 |
| 24.0 | 2.20 | 1.65 | 1.25 | 0.80 | 2.20 | 1.65 | 1.25 | 0.80 | 2.20 | 1.65 | 1.25 | 0.80 | | | | | | | | | 24.0 |
| 26.0 | 2.05 | 1.60 | 1.20 | 0.80 | 2.00 | 1.60 | 1.20 | 0.75 | 2.05 | 1.60 | 1.20 | 0.75 | | | | | | | | | 26.0 |
| 28.0 | 1.95 | 1.50 | 1.10 | 0.75 | 1.80 | 1.50 | 1.10 | 0.75 | 1.85 | 1.55 | 1.15 | 0.75 | | | | | | | | | 28.0 |
| 30.0 | 1.55 | 1.45 | 1.05 | 0.75 | 1.60 | 1.45 | 1.05 | 0.75 | 1.55 | 1.45 | 1.10 | 0.75 | | | | | | | | | 30.0 |
| 32.0 | 1.20 | 1.35 | 1.05 | | 1.30 | 1.35 | 1.05 | | 1.20 | 1.35 | 1.05 | 0.75 | | | | | | | | | 32.0 |
| 34.0 | 0.90 | 1.20 | 1.00 | | 1.00 | 1.25 | 1.00 | | 0.90 | 1.20 | 1.00 | | | | | | | | | | 34.0 |
| 36.0 | 0.65 | 0.90 | 0.95 | | 0.75 | 0.95 | 0.95 | | 0.65 | 0.90 | 0.95 | | | | | | | | | | 36.0 |
| 38.0 | | 0.65 | 0.75 | | 0.50 | 0.70 | 0.80 | | | 0.65 | 0.75 | | | | | | | | | | 38.0 |
| 40.0 | | | 0.45 | | | 0.45 | 0.55 | | | | 0.50 | | | | | | | | | | 40.0 |
| 42.0 | | | | | | | | | | | | | | | | | | | | | 42.0 |
| 1 | 100 | 100 | 100 | 100 | 84 | 84 | 84 | 84 | 100 | 100 | 100 | 100 | | | | | | | | | 1 |
| 2 | 95 | 95 | 95 | 95 | 100 | 100 | 100 | 100 | 100 | 100 | 100 | 100 | | | | | | | | | 2 |
| 3 | 95 | 95 | 95 | 95 | 100 | 100 | 100 | 100 | 100 | 100 | 100 | 100 | | | | | | | | | 3 |
| 4 | 95 | 95 | 95 | 95 | 100 | 100 | 100 | 100 | 100 | 100 | 100 | 100 | | | | | | | | | 4 |
| MODE | 1 | | | | 2 | | | | 1,2 | | | | | | | | | | | | MODE |
| [DEG] | 50 - 83.5 | 52 - 83.5 | 51 - 83.5 | 67 - 83.5 | 47 - 83.5 | 49 - 83.5 | 51 - 83.5 | 67 - 83.5 | 51 - 83.5 | 54 - 83.5 | 53 - 83.5 | 65 - 83.5 | | | | | | | | | [DEG] |

| FAJ | 8.5 m | | 7.6 m | 360 ° | JPN |
|---|---|---|---|---|---|

| m | 10.3 | 10.3 | 10.3 | 10.3 | 33.6 | 33.6 | 33.6 | 33.6 | 33.6 | 33.6 | 33.6 | 33.6 | 37.3 | 37.3 | 37.3 | 37.3 | 37.3 | 37.3 | 37.3 | 37.3 | m |
|---|---|---|---|---|---|---|---|---|---|---|---|---|---|---|---|---|---|---|---|---|---|
| ° | 5 | 25 | 45 | 60 | 5 | 25 | 45 | 60 | 5 | 25 | 45 | 60 | 5 | 25 | 45 | 60 | 5 | 25 | 45 | 60 | ° |
| m 2.0 | 4.20 | | | | | | | | | | | | | | | | | | | | 2.0 |
| 3.0 | 4.20 | | | | | | | | | | | | | | | | | | | | 3.0 |
| 3.5 | 4.20 | | | | | | | | | | | | | | | | | | | | 3.5 |
| 4.0 | 4.20 | | | | | | | | | | | | | | | | | | | | 4.0 |
| 4.5 | 4.20 | 4.20 | | | 4.20 | | | | | | | | | | | | | | | | 4.5 |
| 5.0 | 4.20 | 4.20 | | | 4.20 | | | | 4.20 | | | | | | | | | | | | 5.0 |
| 5.5 | 4.20 | 4.20 | | | 4.20 | | | | 4.20 | | | | 4.20 | | | | 4.20 | | | | 5.5 |
| 6.0 | 4.20 | 4.20 | | | 4.20 | | | | 4.20 | | | | 4.20 | | | | 4.20 | | | | 6.0 |
| 6.5 | 4.20 | 4.20 | 3.00 | | 4.20 | | | | 4.20 | | | | 4.20 | | | | 4.20 | | | | 6.5 |
| 7.0 | 4.20 | 4.20 | 2.90 | | 4.20 | | | | 4.20 | | | | 4.20 | | | | 4.20 | | | | 7.0 |
| 8.0 | 4.20 | 3.95 | 2.75 | 1.70 | 4.20 | 4.20 | | | 4.20 | 4.20 | | | 4.20 | | | | 4.20 | | | | 8.0 |
| 9.0 | 4.20 | 3.75 | 2.60 | 1.65 | 4.20 | 4.20 | | | 4.20 | 4.20 | | | 4.20 | 4.20 | | | 4.20 | 4.20 | | | 9.0 |
| 10.0 | 4.20 | 3.50 | 2.50 | 1.60 | 4.20 | 4.20 | 2.85 | | 4.20 | 4.20 | | | 4.20 | 4.20 | | | 4.20 | 4.20 | | | 10.0 |
| 11.0 | 3.95 | 3.30 | 2.45 | 1.60 | 4.20 | 4.20 | 2.75 | 1.65 | 4.20 | 4.10 | 2.75 | 1.65 | 4.20 | 4.20 | 2.80 | | 4.20 | 4.20 | 2.75 | | 11.0 |
| 12.0 | 3.70 | 3.15 | 2.35 | | 4.20 | 4.00 | 2.70 | 1.65 | 4.20 | 3.85 | 2.70 | 1.65 | 4.20 | 4.10 | 2.70 | 1.65 | 4.20 | 4.00 | 2.70 | 1.65 | 12.0 |
| 13.0 | 3.45 | 3.00 | 2.35 | | 4.20 | 3.85 | 2.65 | 1.60 | 4.20 | 3.65 | 2.65 | 1.60 | 4.20 | 3.95 | 2.65 | 1.60 | 4.20 | 3.75 | 2.65 | 1.60 | 13.0 |
| 14.0 | 3.25 | 2.90 | | | 4.20 | 3.70 | 2.60 | 1.60 | 4.05 | 3.45 | 2.60 | 1.60 | 4.20 | 3.80 | 2.60 | 1.60 | 4.20 | 3.60 | 2.60 | 1.60 | 14.0 |
| 16.0 | | | | | 4.20 | 3.45 | 2.45 | 1.55 | 3.50 | 3.10 | 2.45 | 1.55 | 4.20 | 3.55 | 2.50 | 1.55 | 4.20 | 3.25 | 2.50 | 1.55 | 16.0 |
| 18.0 | | | | | 4.20 | 3.20 | 2.35 | 1.55 | 3.00 | 2.80 | 2.35 | 1.55 | 4.20 | 3.30 | 2.40 | 1.55 | 3.45 | 2.95 | 2.40 | 1.55 | 18.0 |
| 20.0 | | | | | 3.40 | 3.00 | 2.25 | 1.50 | 2.65 | 2.50 | 2.25 | 1.50 | 3.45 | 3.10 | 2.30 | 1.50 | 2.90 | 2.70 | 2.30 | 1.50 | 20.0 |
| 22.0 | | | | | 2.65 | 2.85 | 2.15 | 1.50 | 2.30 | 2.20 | 2.15 | 1.50 | 2.70 | 2.90 | 2.20 | 1.50 | 2.55 | 2.40 | 2.20 | 1.50 | 22.0 |
| 24.0 | | | | | 2.05 | 2.30 | 2.10 | | 2.05 | 1.95 | 1.90 | | 2.10 | 2.35 | 2.10 | 1.50 | 2.25 | 2.15 | 2.05 | 1.45 | 24.0 |
| 26.0 | | | | | 1.55 | 1.80 | 1.90 | | 1.80 | 1.75 | 1.70 | | 1.60 | 1.85 | 2.00 | | 1.90 | 1.90 | 1.85 | | 26.0 |
| 28.0 | | | | | 1.10 | 1.35 | 1.45 | | 1.55 | 1.55 | 1.50 | | 1.15 | 1.40 | 1.50 | | 1.45 | 1.65 | 1.65 | | 28.0 |
| 30.0 | | | | | 0.75 | 0.95 | | | 1.40 | 1.35 | | | 0.80 | 1.00 | 1.10 | | 1.10 | 1.30 | 1.35 | | 30.0 |
| 32.0 | | | | | 0.40 | 0.55 | | | 1.10 | 1.20 | | | 0.45 | 0.65 | 0.70 | | 0.75 | 0.95 | 1.00 | | 32.0 |
| 34.0 | | | | | | | | | 0.80 | 0.90 | | | | | | | 0.50 | 0.60 | | | 34.0 |
| 36.0 | | | | | | | | | 0.55 | 0.60 | | | | | | | | | | | 36.0 |
| 38.0 | | | | | | | | | | | | | | | | | | | | | 38.0 |
| 40.0 | | | | | | | | | | | | | | | | | | | | | 40.0 |
| 42.0 | | | | | | | | | | | | | | | | | | | | | 42.0 |
| % 1 | 0 | 0 | 0 | 0 | 100 | 100 | 100 | 100 | 0 | 0 | 0 | 0 | 100 | 100 | 100 | 100 | 50 | 50 | 50 | 50 | 1 |
| % 2 | 0 | 0 | 0 | 0 | 68 | 68 | 68 | 68 | 100 | 100 | 100 | 100 | 83 | 83 | 83 | 83 | 100 | 100 | 100 | 100 | 2 |
| % 3 | 0 | 0 | 0 | 0 | 68 | 68 | 68 | 68 | 100 | 100 | 100 | 100 | 83 | 83 | 83 | 83 | 100 | 100 | 100 | 100 | 3 |
| % 4 | 0 | 0 | 0 | 0 | 68 | 68 | 68 | 68 | 100 | 100 | 100 | 100 | 83 | 83 | 83 | 83 | 100 | 100 | 100 | 100 | 4 |
| MODE | 1,2 | | | | 1 | | | | 2 | | | | 1 | | | | 2 | | | | MODE |
| [DEG] | 30 - 83.5 | 38 - 83.5 | 49 - 83.5 | 63 - 83.5 | 38 - 83.5 | 42 - 83.5 | 52 - 83.5 | 64 - 83.5 | 27 - 83.5 | 30 - 83.5 | 53 - 83.5 | 65 - 83.5 | 45 - 83.5 | 48 - 83.5 | 50 - 83.5 | 64 - 83.5 | 41 - 83.5 | 44 - 83.5 | 50 - 83.5 | 64 - 83.5 | [DEG] |

| m | 40.0 | 40.0 | 40.0 | 40.0 | 40.0 | 40.0 | 40.0 | 40.0 | 41.2 | 41.2 | 41.2 | 41.2 | | | | | | | | | m |
|---|---|---|---|---|---|---|---|---|---|---|---|---|---|---|---|---|---|---|---|---|---|
| ° | 5 | 25 | 45 | 60 | 5 | 25 | 45 | 60 | 5 | 25 | 45 | 60 | | | | | | | | | ° |
| m 2.0 | | | | | | | | | | | | | | | | | | | | | 2.0 |
| 3.0 | | | | | | | | | | | | | | | | | | | | | 3.0 |
| 3.5 | | | | | | | | | | | | | | | | | | | | | 3.5 |
| 4.0 | | | | | | | | | | | | | | | | | | | | | 4.0 |
| 4.5 | | | | | | | | | | | | | | | | | | | | | 4.5 |
| 5.0 | | | | | | | | | | | | | | | | | | | | | 5.0 |
| 5.5 | | | | | | | | | | | | | | | | | | | | | 5.5 |
| 6.0 | 4.00 | | | | 4.00 | | | | 3.80 | | | | | | | | | | | | 6.0 |
| 6.5 | 4.00 | | | | 4.00 | | | | 3.80 | | | | | | | | | | | | 6.5 |
| 7.0 | 4.00 | | | | 4.00 | | | | 3.80 | | | | | | | | | | | | 7.0 |
| 8.0 | 4.00 | | | | 4.00 | | | | 3.80 | | | | | | | | | | | | 8.0 |
| 9.0 | 4.00 | | | | 4.00 | | | | 3.80 | | | | | | | | | | | | 9.0 |
| 10.0 | 4.00 | 4.00 | | | 4.00 | 4.00 | | | 3.80 | 3.80 | | | | | | | | | | | 10.0 |
| 11.0 | 4.00 | 4.00 | | | 4.00 | 4.00 | | | 3.80 | 3.80 | | | | | | | | | | | 11.0 |
| 12.0 | 4.00 | 4.00 | 2.70 | 1.65 | 4.00 | 4.00 | 2.70 | 1.65 | 3.80 | 3.80 | 2.75 | | | | | | | | | | 12.0 |
| 13.0 | 4.00 | 4.00 | 2.65 | 1.60 | 4.00 | 3.85 | 2.65 | 1.60 | 3.80 | 3.80 | 2.65 | 1.60 | | | | | | | | | 13.0 |
| 14.0 | 4.00 | 3.85 | 2.60 | 1.60 | 4.00 | 3.65 | 2.60 | 1.60 | 3.80 | 3.70 | 2.60 | 1.60 | | | | | | | | | 14.0 |
| 16.0 | 4.00 | 3.60 | 2.50 | 1.55 | 3.95 | 3.30 | 2.50 | 1.55 | 3.80 | 3.35 | 2.50 | 1.55 | | | | | | | | | 16.0 |
| 18.0 | 4.00 | 3.35 | 2.40 | 1.55 | 3.45 | 3.05 | 2.40 | 1.55 | 3.55 | 3.05 | 2.40 | 1.55 | | | | | | | | | 18.0 |
| 20.0 | 3.45 | 3.15 | 2.30 | 1.50 | 3.05 | 2.80 | 2.30 | 1.50 | 3.10 | 2.80 | 2.30 | 1.50 | | | | | | | | | 20.0 |
| 22.0 | 2.70 | 2.95 | 2.20 | 1.50 | 2.70 | 2.50 | 2.20 | 1.50 | 2.70 | 2.55 | 2.20 | 1.50 | | | | | | | | | 22.0 |
| 24.0 | 2.10 | 2.40 | 2.10 | 1.45 | 2.20 | 2.25 | 2.10 | 1.45 | 2.10 | 2.30 | 2.15 | 1.45 | | | | | | | | | 24.0 |
| 26.0 | 1.60 | 1.85 | 2.05 | | 1.70 | 1.95 | 1.95 | | 1.60 | 1.85 | 2.00 | 1.45 | | | | | | | | | 26.0 |
| 28.0 | 1.15 | 1.40 | 1.55 | | 1.25 | 1.50 | 1.65 | | 1.20 | 1.45 | 1.55 | | | | | | | | | | 28.0 |
| 30.0 | 0.80 | 1.00 | 1.15 | | 0.90 | 1.10 | 1.20 | | 0.80 | 1.05 | 1.15 | | | | | | | | | | 30.0 |
| 32.0 | 0.45 | 0.65 | 0.75 | | 0.55 | 0.75 | 0.85 | | 0.50 | 0.70 | 0.80 | | | | | | | | | | 32.0 |
| 34.0 | | | 0.40 | | | 0.45 | 0.50 | | | | 0.45 | | | | | | | | | | 34.0 |
| 36.0 | | | | | | | | | | | | | | | | | | | | | 36.0 |
| 38.0 | | | | | | | | | | | | | | | | | | | | | 38.0 |
| 40.0 | | | | | | | | | | | | | | | | | | | | | 40.0 |
| 42.0 | | | | | | | | | | | | | | | | | | | | | 42.0 |
| % 1 | 100 | 100 | 100 | 100 | 84 | 84 | 84 | 84 | 100 | 100 | 100 | 100 | | | | | | | | | 1 |
| % 2 | 95 | 95 | 95 | 95 | 100 | 100 | 100 | 100 | 100 | 100 | 100 | 100 | | | | | | | | | 2 |
| % 3 | 95 | 95 | 95 | 95 | 100 | 100 | 100 | 100 | 100 | 100 | 100 | 100 | | | | | | | | | 3 |
| % 4 | 95 | 95 | 95 | 95 | 100 | 100 | 100 | 100 | 100 | 100 | 100 | 100 | | | | | | | | | 4 |
| MODE | 1 | | | | 2 | | | | 1,2 | | | | | | | | | | | | MODE |
| [DEG] | 49 - 83.5 | 52 - 83.5 | 50 - 83.5 | 67 - 83.5 | 47 - 83.5 | 48 - 83.5 | 50 - 83.5 | 67 - 83.5 | 50 - 83.5 | 53 - 83.5 | 52 - 83.5 | 64 - 83.5 | | | | | | | | | [DEG] |

| FAJ | 13.7 m | | 7.6 m | 360 ° | JPN |
|---|---|---|---|---|---|

| m | 10.3 | 10.3 | 10.3 | 10.3 | 33.6 | 33.6 | 33.6 | 33.6 | 33.6 | 33.6 | 33.6 | 33.6 | 37.3 | 37.3 | 37.3 | 37.3 | 37.3 | 37.3 | 37.3 | 37.3 | m |
|---|---|---|---|---|---|---|---|---|---|---|---|---|---|---|---|---|---|---|---|---|---|
| ° | 5 | 25 | 45 | 60 | 5 | 25 | 45 | 60 | 5 | 25 | 45 | 60 | 5 | 25 | 45 | 60 | 5 | 25 | 45 | 60 | ° |
| 2.0 | | | | | | | | | | | | | | | | | | | | | 2.0 |
| 3.0 | 3.20 | | | | | | | | | | | | | | | | | | | | 3.0 |
| 3.5 | 3.20 | | | | | | | | | | | | | | | | | | | | 3.5 |
| 4.0 | 3.20 | | | | | | | | | | | | | | | | | | | | 4.0 |
| 4.5 | 3.20 | | | | | | | | | | | | | | | | | | | | 4.5 |
| 5.0 | 3.20 | | | | | | | | | | | | | | | | | | | | 5.0 |
| 5.5 | 3.20 | | | | | | | | | | | | | | | | | | | | 5.5 |
| 6.0 | 3.20 | | | | 3.20 | | | | 3.00 | | | | | | | | | | | | 6.0 |
| 6.5 | 3.20 | | | | 3.20 | | | | 3.00 | | | | 3.00 | | | | 2.90 | | | | 6.5 |
| 7.0 | 3.20 | | | | 3.20 | | | | 3.00 | | | | 3.00 | | | | 2.90 | | | | 7.0 |
| 8.0 | 3.05 | 2.35 | | | 3.20 | | | | 3.00 | | | | 3.00 | | | | 2.90 | | | | 8.0 |
| 9.0 | 2.75 | 2.20 | | | 3.20 | | | | 3.00 | | | | 3.00 | | | | 2.90 | | | | 9.0 |
| 10.0 | 2.55 | 2.05 | | | 3.20 | | | | 3.00 | | | | 3.00 | | | | 2.90 | | | | 10.0 |
| 11.0 | 2.35 | 1.90 | | | 3.20 | | | | 3.00 | | | | 3.00 | | | | 2.90 | | | | 11.0 |
| 12.0 | 2.15 | 1.80 | 1.55 | | 3.20 | 2.20 | | | 3.00 | 2.20 | | | 3.00 | 2.25 | | | 2.90 | 2.20 | | | 12.0 |
| 13.0 | 2.00 | 1.70 | 1.50 | 0.90 | 3.10 | 2.15 | | | 3.00 | 2.15 | | | 3.00 | 2.15 | | | 2.90 | 2.15 | | | 13.0 |
| 14.0 | 1.85 | 1.65 | 1.45 | 0.90 | 2.95 | 2.10 | | | 2.95 | 2.10 | | | 3.00 | 2.10 | | | 2.90 | 2.10 | | | 14.0 |
| 16.0 | 1.65 | 1.50 | 1.35 | 0.85 | 2.70 | 1.95 | 1.50 | | 2.70 | 1.95 | 1.50 | | 2.80 | 2.00 | 1.50 | | 2.80 | 2.00 | 1.50 | | 16.0 |
| 18.0 | 1.50 | 1.40 | 1.30 | | 2.55 | 1.85 | 1.40 | 0.85 | 2.50 | 1.85 | 1.40 | 0.85 | 2.60 | 1.90 | 1.45 | 0.85 | 2.60 | 1.90 | 1.45 | 0.85 | 18.0 |
| 20.0 | 1.35 | 1.30 | | | 2.35 | 1.75 | 1.35 | 0.85 | 2.35 | 1.75 | 1.35 | 0.80 | 2.40 | 1.80 | 1.35 | 0.85 | 2.40 | 1.80 | 1.35 | 0.85 | 20.0 |
| 22.0 | | | | | 2.20 | 1.65 | 1.25 | 0.80 | 2.20 | 1.65 | 1.25 | 0.80 | 2.30 | 1.70 | 1.30 | 0.80 | 2.25 | 1.70 | 1.30 | 0.80 | 22.0 |
| 24.0 | | | | | 2.10 | 1.60 | 1.20 | 0.80 | 1.95 | 1.60 | 1.20 | 0.80 | 2.15 | 1.65 | 1.20 | 0.80 | 2.10 | 1.65 | 1.20 | 0.80 | 24.0 |
| 26.0 | | | | | 1.95 | 1.50 | 1.15 | 0.80 | 1.70 | 1.50 | 1.15 | 0.80 | 2.00 | 1.55 | 1.15 | 0.80 | 1.90 | 1.55 | 1.15 | 0.80 | 26.0 |
| 28.0 | | | | | 1.60 | 1.45 | 1.10 | 0.80 | 1.50 | 1.45 | 1.10 | 0.80 | 1.60 | 1.50 | 1.10 | 0.75 | 1.70 | 1.50 | 1.10 | 0.75 | 28.0 |
| 30.0 | | | | | 1.25 | 1.35 | 1.05 | | 1.35 | 1.35 | 1.05 | | 1.20 | 1.40 | 1.05 | 0.75 | 1.50 | 1.40 | 1.05 | 0.75 | 30.0 |
| 32.0 | | | | | 0.90 | 1.20 | 1.00 | | 1.20 | 1.20 | 1.00 | | 0.90 | 1.20 | 1.00 | | 1.15 | 1.30 | 1.00 | | 32.0 |
| 34.0 | | | | | 0.60 | 0.85 | 0.95 | | 1.05 | 1.05 | 0.95 | | 0.60 | 0.90 | 1.00 | | 0.90 | 1.10 | 1.00 | | 34.0 |
| 36.0 | | | | | | 0.55 | | | 0.90 | 0.95 | | | | 0.60 | 0.70 | | 0.65 | 0.85 | 0.95 | | 36.0 |
| 38.0 | | | | | | | | | 0.70 | 0.85 | | | | | | | 0.40 | 0.60 | 0.65 | | 38.0 |
| 40.0 | | | | | | | | | 0.50 | 0.60 | | | | | | | | | | | 40.0 |
| 42.0 | | | | | | | | | | | | | | | | | | | | | 42.0 |
| % 1 | 0 | 0 | 0 | 0 | 100 | 100 | 100 | 100 | 0 | 0 | 0 | 0 | 100 | 100 | 100 | 100 | 50 | 50 | 50 | 50 | 1 |
| % 2 | 0 | 0 | 0 | 0 | 68 | 68 | 68 | 68 | 100 | 100 | 100 | 100 | 83 | 83 | 83 | 83 | 100 | 100 | 100 | 100 | 2 |
| % 3 | 0 | 0 | 0 | 0 | 68 | 68 | 68 | 68 | 100 | 100 | 100 | 100 | 83 | 83 | 83 | 83 | 100 | 100 | 100 | 100 | 3 |
| % 4 | 0 | 0 | 0 | 0 | 68 | 68 | 68 | 68 | 100 | 100 | 100 | 100 | 83 | 83 | 83 | 83 | 100 | 100 | 100 | 100 | 4 |
| MODE | 1,2 | | | | 1 | | | | 2 | | | | 1 | | | | 2 | | | | MODE |
| [DEG] | 23 - 83.5 | 35 - 83.5 | 54 - 83.5 | 67 - 83.5 | 45 - 83.5 | 46 - 83.5 | 53 - 83.5 | 64 - 83.5 | 32 - 83.5 | 38 - 83.5 | 53 - 83.5 | 65 - 83.5 | 50 - 83.5 | 52 - 83.5 | 54 - 83.5 | 64 - 83.5 | 43 - 83.5 | 49 - 83.5 | 51 - 83.5 | 64 - 83.5 | [DEG] |

| m | 40.0 | 40.0 | 40.0 | 40.0 | 40.0 | 40.0 | 40.0 | 40.0 | 41.2 | 41.2 | 41.2 | 41.2 | | | | | | | | | m |
|---|---|---|---|---|---|---|---|---|---|---|---|---|---|---|---|---|---|---|---|---|---|
| ° | 5 | 25 | 45 | 60 | 5 | 25 | 45 | 60 | 5 | 25 | 45 | 60 | | | | | | | | | ° |
| 2.0 | | | | | | | | | | | | | | | | | | | | | 2.0 |
| 3.0 | | | | | | | | | | | | | | | | | | | | | 3.0 |
| 3.5 | | | | | | | | | | | | | | | | | | | | | 3.5 |
| 4.0 | | | | | | | | | | | | | | | | | | | | | 4.0 |
| 4.5 | | | | | | | | | | | | | | | | | | | | | 4.5 |
| 5.0 | | | | | | | | | | | | | | | | | | | | | 5.0 |
| 5.5 | | | | | | | | | | | | | | | | | | | | | 5.5 |
| 6.0 | | | | | | | | | | | | | | | | | | | | | 6.0 |
| 6.5 | | | | | | | | | | | | | | | | | | | | | 6.5 |
| 7.0 | 3.00 | | | | 2.80 | | | | 2.50 | | | | | | | | | | | | 7.0 |
| 8.0 | 3.00 | | | | 2.80 | | | | 2.50 | | | | | | | | | | | | 8.0 |
| 9.0 | 3.00 | | | | 2.80 | | | | 2.50 | | | | | | | | | | | | 9.0 |
| 10.0 | 3.00 | | | | 2.80 | | | | 2.50 | | | | | | | | | | | | 10.0 |
| 11.0 | 3.00 | | | | 2.80 | | | | 2.50 | | | | | | | | | | | | 11.0 |
| 12.0 | 3.00 | | | | 2.80 | | | | 2.50 | | | | | | | | | | | | 12.0 |
| 13.0 | 3.00 | 2.15 | | | 2.80 | 2.15 | | | 2.50 | 2.15 | | | | | | | | | | | 13.0 |
| 14.0 | 3.00 | 2.10 | | | 2.80 | 2.10 | | | 2.50 | 2.10 | | | | | | | | | | | 14.0 |
| 16.0 | 2.85 | 2.00 | | | 2.80 | 2.00 | | | 2.50 | 2.00 | | | | | | | | | | | 16.0 |
| 18.0 | 2.65 | 1.90 | 1.45 | 0.85 | 2.65 | 1.90 | 1.45 | 0.85 | 2.50 | 1.90 | 1.45 | 0.85 | | | | | | | | | 18.0 |
| 20.0 | 2.45 | 1.80 | 1.40 | 0.85 | 2.45 | 1.80 | 1.40 | 0.85 | 2.50 | 1.80 | 1.40 | 0.85 | | | | | | | | | 20.0 |
| 22.0 | 2.30 | 1.75 | 1.30 | 0.80 | 2.30 | 1.75 | 1.30 | 0.80 | 2.35 | 1.75 | 1.30 | 0.80 | | | | | | | | | 22.0 |
| 24.0 | 2.20 | 1.65 | 1.25 | 0.80 | 2.20 | 1.65 | 1.25 | 0.80 | 2.20 | 1.65 | 1.25 | 0.80 | | | | | | | | | 24.0 |
| 26.0 | 2.00 | 1.60 | 1.20 | 0.80 | 2.00 | 1.60 | 1.20 | 0.75 | 2.00 | 1.60 | 1.20 | 0.75 | | | | | | | | | 26.0 |
| 28.0 | 1.60 | 1.50 | 1.10 | 0.75 | 1.65 | 1.50 | 1.10 | 0.75 | 1.60 | 1.55 | 1.15 | 0.75 | | | | | | | | | 28.0 |
| 30.0 | 1.20 | 1.45 | 1.05 | 0.75 | 1.30 | 1.45 | 1.05 | 0.75 | 1.20 | 1.45 | 1.10 | 0.75 | | | | | | | | | 30.0 |
| 32.0 | 0.90 | 1.20 | 1.05 | | 0.95 | 1.25 | 1.05 | | 0.90 | 1.20 | 1.05 | 0.75 | | | | | | | | | 32.0 |
| 34.0 | 0.60 | 0.90 | 1.00 | | 0.70 | 0.95 | 1.00 | | 0.60 | 0.90 | 1.00 | | | | | | | | | | 34.0 |
| 36.0 | | 0.60 | 0.75 | | 0.45 | 0.70 | 0.80 | | | 0.60 | 0.75 | | | | | | | | | | 36.0 |
| 38.0 | | | 0.45 | | | 0.40 | 0.55 | | | | 0.45 | | | | | | | | | | 38.0 |
| 40.0 | | | | | | | | | | | | | | | | | | | | | 40.0 |
| 42.0 | | | | | | | | | | | | | | | | | | | | | 42.0 |
| % 1 | 100 | 100 | 100 | 100 | 84 | 84 | 84 | 84 | 100 | 100 | 100 | 100 | | | | | | | | | 1 |
| % 2 | 95 | 95 | 95 | 95 | 100 | 100 | 100 | 100 | 100 | 100 | 100 | 100 | | | | | | | | | 2 |
| % 3 | 95 | 95 | 95 | 95 | 100 | 100 | 100 | 100 | 100 | 100 | 100 | 100 | | | | | | | | | 3 |
| % 4 | 95 | 95 | 95 | 95 | 100 | 100 | 100 | 100 | 100 | 100 | 100 | 100 | | | | | | | | | 4 |
| MODE | 1 | | | | 2 | | | | 1,2 | | | | | | | | | | | | MODE |
| [DEG] | 53 - 83.5 | 55 - 83.5 | 54 - 83.5 | 67 - 83.5 | 50 - 83.5 | 52 - 83.5 | 55 - 83.5 | 67 - 83.5 | 54 - 83.5 | 56 - 83.5 | 56 - 83.5 | 65 - 83.5 | | | | | | | | | [DEG] |

| FAJ | 8.5 m | | 7.2 m | 360 ° | JPN |
|---|---|---|---|---|---|

| m | 10.3 | 10.3 | 10.3 | 10.3 | 33.6 | 33.6 | 33.6 | 33.6 | 33.6 | 33.6 | 33.6 | 33.6 | 37.3 | 37.3 | 37.3 | 37.3 | 37.3 | 37.3 | 37.3 | 37.3 | m |
|---|---|---|---|---|---|---|---|---|---|---|---|---|---|---|---|---|---|---|---|---|---|
| ° | 5 | 25 | 45 | 60 | 5 | 25 | 45 | 60 | 5 | 25 | 45 | 60 | 5 | 25 | 45 | 60 | 5 | 25 | 45 | 60 | ° |
| 2.0 | 4.20 | | | | | | | | | | | | | | | | | | | | 2.0 |
| 3.0 | 4.20 | | | | | | | | | | | | | | | | | | | | 3.0 |
| 3.5 | 4.20 | | | | | | | | | | | | | | | | | | | | 3.5 |
| 4.0 | 4.20 | | | | | | | | | | | | | | | | | | | | 4.0 |
| 4.5 | 4.20 | 4.20 | | | 4.20 | | | | | | | | | | | | | | | | 4.5 |
| 5.0 | 4.20 | 4.20 | | | 4.20 | | | | 4.20 | | | | | | | | | | | | 5.0 |
| 5.5 | 4.20 | 4.20 | | | 4.20 | | | | 4.20 | | | | 4.20 | | | | 4.20 | | | | 5.5 |
| 6.0 | 4.20 | 4.20 | | | 4.20 | | | | 4.20 | | | | 4.20 | | | | 4.20 | | | | 6.0 |
| 6.5 | 4.20 | 4.20 | 3.00 | | 4.20 | | | | 4.20 | | | | 4.20 | | | | 4.20 | | | | 6.5 |
| 7.0 | 4.20 | 4.20 | 2.90 | | 4.20 | | | | 4.20 | | | | 4.20 | | | | 4.20 | | | | 7.0 |
| 8.0 | 4.20 | 3.95 | 2.75 | 1.70 | 4.20 | 4.20 | | | 4.20 | 4.20 | | | 4.20 | | | | 4.20 | | | | 8.0 |
| 9.0 | 4.20 | 3.75 | 2.60 | 1.65 | 4.20 | 4.20 | | | 4.20 | 4.20 | | | 4.20 | 4.20 | | | 4.20 | 4.20 | | | 9.0 |
| 10.0 | 4.20 | 3.50 | 2.50 | 1.60 | 4.20 | 4.20 | 2.85 | | 4.20 | 4.20 | | | 4.20 | 4.20 | | | 4.20 | 4.20 | | | 10.0 |
| 11.0 | 3.95 | 3.30 | 2.45 | 1.60 | 4.20 | 4.20 | 2.75 | 1.65 | 4.20 | 4.10 | 2.75 | 1.65 | 4.20 | 4.20 | 2.80 | | 4.20 | 4.20 | 2.75 | | 11.0 |
| 12.0 | 3.70 | 3.15 | 2.35 | | 4.20 | 4.00 | 2.70 | 1.65 | 4.20 | 3.85 | 2.70 | 1.65 | 4.20 | 4.10 | 2.70 | 1.65 | 4.20 | 4.00 | 2.70 | 1.65 | 12.0 |
| 13.0 | 3.45 | 3.00 | 2.35 | | 4.20 | 3.85 | 2.65 | 1.60 | 4.20 | 3.65 | 2.65 | 1.60 | 4.20 | 3.95 | 2.65 | 1.60 | 4.20 | 3.75 | 2.65 | 1.60 | 13.0 |
| 14.0 | 3.25 | 2.90 | | | 4.20 | 3.70 | 2.60 | 1.60 | 4.05 | 3.45 | 2.60 | 1.60 | 4.20 | 3.80 | 2.60 | 1.60 | 4.20 | 3.60 | 2.60 | 1.60 | 14.0 |
| 16.0 | | | | | 4.20 | 3.45 | 2.45 | 1.55 | 3.50 | 3.10 | 2.45 | 1.55 | 4.20 | 3.55 | 2.50 | 1.55 | 4.20 | 3.25 | 2.50 | 1.55 | 16.0 |
| 18.0 | | | | | 4.00 | 3.20 | 2.35 | 1.55 | 3.00 | 2.80 | 2.35 | 1.55 | 4.00 | 3.30 | 2.40 | 1.55 | 3.45 | 2.95 | 2.40 | 1.55 | 18.0 |
| 20.0 | | | | | 3.10 | 3.00 | 2.25 | 1.50 | 2.65 | 2.50 | 2.25 | 1.50 | 3.15 | 3.10 | 2.30 | 1.50 | 2.90 | 2.70 | 2.30 | 1.50 | 20.0 |
| 22.0 | | | | | 2.40 | 2.70 | 2.15 | 1.50 | 2.30 | 2.20 | 2.15 | 1.50 | 2.40 | 2.75 | 2.20 | 1.50 | 2.55 | 2.40 | 2.20 | 1.50 | 22.0 |
| 24.0 | | | | | 1.80 | 2.10 | 2.10 | | 2.05 | 1.95 | 1.90 | | 1.80 | 2.15 | 2.10 | 1.50 | 2.15 | 2.15 | 2.05 | 1.45 | 24.0 |
| 26.0 | | | | | 1.30 | 1.55 | 1.70 | | 1.80 | 1.75 | 1.70 | | 1.30 | 1.60 | 1.75 | | 1.65 | 1.90 | 1.85 | | 26.0 |
| 28.0 | | | | | 0.90 | 1.10 | 1.20 | | 1.55 | 1.55 | 1.50 | | 0.90 | 1.15 | 1.30 | | 1.20 | 1.45 | 1.55 | | 28.0 |
| 30.0 | | | | | 0.55 | 0.70 | | | 1.15 | 1.30 | | | 0.55 | 0.75 | 0.85 | | 0.85 | 1.05 | 1.15 | | 30.0 |
| 32.0 | | | | | | | | | 0.85 | 1.00 | | | | 0.45 | 0.50 | | 0.55 | 0.70 | 0.80 | | 32.0 |
| 34.0 | | | | | | | | | 0.60 | 0.70 | | | | | | | | 0.45 | | | 34.0 |
| 36.0 | | | | | | | | | | 0.45 | | | | | | | | | | | 36.0 |
| 38.0 | | | | | | | | | | | | | | | | | | | | | 38.0 |
| 40.0 | | | | | | | | | | | | | | | | | | | | | 40.0 |
| 42.0 | | | | | | | | | | | | | | | | | | | | | 42.0 |
| % 1 | 0 | 0 | 0 | 0 | 100 | 100 | 100 | 100 | 0 | 0 | 0 | 0 | 100 | 100 | 100 | 100 | 50 | 50 | 50 | 50 | 1 |
| % 2 | 0 | 0 | 0 | 0 | 68 | 68 | 68 | 68 | 100 | 100 | 100 | 100 | 83 | 83 | 83 | 83 | 100 | 100 | 100 | 100 | 2 |
| % 3 | 0 | 0 | 0 | 0 | 68 | 68 | 68 | 68 | 100 | 100 | 100 | 100 | 83 | 83 | 83 | 83 | 100 | 100 | 100 | 100 | 3 |
| % 4 | 0 | 0 | 0 | 0 | 68 | 68 | 68 | 68 | 100 | 100 | 100 | 100 | 83 | 83 | 83 | 83 | 100 | 100 | 100 | 100 | 4 |
| MODE | 1,2 | | | | 1 | | | | 2 | | | | 1 | | | | 2 | | | | MODE |
| [DEG] | 30 - 83.5 | 38 - 83.5 | 49 - 83.5 | 63 - 83.5 | 43 - 83.5 | 46 - 83.5 | 52 - 83.5 | 64 - 83.5 | 33 - 83.5 | 30 - 83.5 | 53 - 83.5 | 65 - 83.5 | 49 - 83.5 | 48 - 83.5 | 50 - 83.5 | 64 - 83.5 | 45 - 83.5 | 44 - 83.5 | 50 - 83.5 | 64 - 83.5 | [DEG] |

| m | 40.0 | 40.0 | 40.0 | 40.0 | 40.0 | 40.0 | 40.0 | 40.0 | 41.2 | 41.2 | 41.2 | 41.2 | | | | | | | | | m |
|---|---|---|---|---|---|---|---|---|---|---|---|---|---|---|---|---|---|---|---|---|---|
| ° | 5 | 25 | 45 | 60 | 5 | 25 | 45 | 60 | 5 | 25 | 45 | 60 | | | | | | | | | ° |
| 2.0 | | | | | | | | | | | | | | | | | | | | | 2.0 |
| 3.0 | | | | | | | | | | | | | | | | | | | | | 3.0 |
| 3.5 | | | | | | | | | | | | | | | | | | | | | 3.5 |
| 4.0 | | | | | | | | | | | | | | | | | | | | | 4.0 |
| 4.5 | | | | | | | | | | | | | | | | | | | | | 4.5 |
| 5.0 | | | | | | | | | | | | | | | | | | | | | 5.0 |
| 5.5 | | | | | | | | | | | | | | | | | | | | | 5.5 |
| 6.0 | 4.00 | | | | 4.00 | | | | 3.80 | | | | | | | | | | | | 6.0 |
| 6.5 | 4.00 | | | | 4.00 | | | | 3.80 | | | | | | | | | | | | 6.5 |
| 7.0 | 4.00 | | | | 4.00 | | | | 3.80 | | | | | | | | | | | | 7.0 |
| 8.0 | 4.00 | | | | 4.00 | | | | 3.80 | | | | | | | | | | | | 8.0 |
| 9.0 | 4.00 | | | | 4.00 | | | | 3.80 | | | | | | | | | | | | 9.0 |
| 10.0 | 4.00 | 4.00 | | | 4.00 | 4.00 | | | 3.80 | 3.80 | | | | | | | | | | | 10.0 |
| 11.0 | 4.00 | 4.00 | | | 4.00 | 4.00 | | | 3.80 | 3.80 | | | | | | | | | | | 11.0 |
| 12.0 | 4.00 | 4.00 | 2.70 | 1.65 | 4.00 | 4.00 | 2.70 | 1.65 | 3.80 | 3.80 | 2.75 | | | | | | | | | | 12.0 |
| 13.0 | 4.00 | 4.00 | 2.65 | 1.60 | 4.00 | 3.85 | 2.65 | 1.60 | 3.80 | 3.80 | 2.65 | 1.60 | | | | | | | | | 13.0 |
| 14.0 | 4.00 | 3.85 | 2.60 | 1.60 | 4.00 | 3.65 | 2.60 | 1.60 | 3.80 | 3.70 | 2.60 | 1.60 | | | | | | | | | 14.0 |
| 16.0 | 4.00 | 3.60 | 2.50 | 1.55 | 3.95 | 3.30 | 2.50 | 1.55 | 3.80 | 3.35 | 2.50 | 1.55 | | | | | | | | | 16.0 |
| 18.0 | 3.95 | 3.35 | 2.40 | 1.55 | 3.45 | 3.05 | 2.40 | 1.55 | 3.55 | 3.05 | 2.40 | 1.55 | | | | | | | | | 18.0 |
| 20.0 | 3.10 | 3.15 | 2.30 | 1.50 | 3.05 | 2.80 | 2.30 | 1.50 | 3.10 | 2.80 | 2.30 | 1.50 | | | | | | | | | 20.0 |
| 22.0 | 2.40 | 2.80 | 2.20 | 1.50 | 2.50 | 2.50 | 2.20 | 1.50 | 2.40 | 2.55 | 2.20 | 1.50 | | | | | | | | | 22.0 |
| 24.0 | 1.85 | 2.15 | 2.10 | 1.45 | 1.95 | 2.25 | 2.10 | 1.45 | 1.85 | 2.15 | 2.15 | 1.45 | | | | | | | | | 24.0 |
| 26.0 | 1.35 | 1.60 | 1.80 | | 1.45 | 1.70 | 1.90 | | 1.35 | 1.65 | 1.85 | 1.45 | | | | | | | | | 26.0 |
| 28.0 | 0.95 | 1.15 | 1.35 | | 1.00 | 1.25 | 1.40 | | 0.95 | 1.20 | 1.35 | | | | | | | | | | 28.0 |
| 30.0 | 0.60 | 0.80 | 0.90 | | 0.65 | 0.90 | 1.00 | | 0.60 | 0.80 | 0.95 | | | | | | | | | | 30.0 |
| 32.0 | | 0.45 | 0.55 | | | 0.55 | 0.65 | | | 0.45 | 0.55 | | | | | | | | | | 32.0 |
| 34.0 | | | | | | | | | | | | | | | | | | | | | 34.0 |
| 36.0 | | | | | | | | | | | | | | | | | | | | | 36.0 |
| 38.0 | | | | | | | | | | | | | | | | | | | | | 38.0 |
| 40.0 | | | | | | | | | | | | | | | | | | | | | 40.0 |
| 42.0 | | | | | | | | | | | | | | | | | | | | | 42.0 |
| % 1 | 100 | 100 | 100 | 100 | 84 | 84 | 84 | 84 | 100 | 100 | 100 | 100 | | | | | | | | | 1 |
| % 2 | 95 | 95 | 95 | 95 | 100 | 100 | 100 | 100 | 100 | 100 | 100 | 100 | | | | | | | | | 2 |
| % 3 | 95 | 95 | 95 | 95 | 100 | 100 | 100 | 100 | 100 | 100 | 100 | 100 | | | | | | | | | 3 |
| % 4 | 95 | 95 | 95 | 95 | 100 | 100 | 100 | 100 | 100 | 100 | 100 | 100 | | | | | | | | | 4 |
| MODE | 1 | | | | 2 | | | | 1,2 | | | | | | | | | | | | MODE |
| [DEG] | 52 - 83.5 | 52 - 83.5 | 53 - 83.5 | 67 - 83.5 | 50 - 83.5 | 52 - 83.5 | 53 - 83.5 | 67 - 83.5 | 53 - 83.5 | 53 - 83.5 | 55 - 83.5 | 64 - 83.5 | | | | | | | | | [DEG] |

| FAJ | 13.7 m | | 7.2 m | 360 ° | JPN |
|---|---|---|---|---|---|

| m | 10.3 | 10.3 | 10.3 | 10.3 | 33.6 | 33.6 | 33.6 | 33.6 | 33.6 | 33.6 | 33.6 | 33.6 | 37.3 | 37.3 | 37.3 | 37.3 | 37.3 | 37.3 | 37.3 | 37.3 | m |
|---|---|---|---|---|---|---|---|---|---|---|---|---|---|---|---|---|---|---|---|---|---|
| ° | 5 | 25 | 45 | 60 | 5 | 25 | 45 | 60 | 5 | 25 | 45 | 60 | 5 | 25 | 45 | 60 | 5 | 25 | 45 | 60 | ° |
| m 2.0 | | | | | | | | | | | | | | | | | | | | | 2.0 |
| 3.0 | 3.20 | | | | | | | | | | | | | | | | | | | | 3.0 |
| 3.5 | 3.20 | | | | | | | | | | | | | | | | | | | | 3.5 |
| 4.0 | 3.20 | | | | | | | | | | | | | | | | | | | | 4.0 |
| 4.5 | 3.20 | | | | | | | | | | | | | | | | | | | | 4.5 |
| 5.0 | 3.20 | | | | | | | | | | | | | | | | | | | | 5.0 |
| 5.5 | 3.20 | | | | | | | | | | | | | | | | | | | | 5.5 |
| 6.0 | 3.20 | | | | 3.20 | | | | 3.00 | | | | | | | | | | | | 6.0 |
| 6.5 | 3.20 | | | | 3.20 | | | | 3.00 | | | | 3.00 | | | | 2.90 | | | | 6.5 |
| 7.0 | 3.20 | | | | 3.20 | | | | 3.00 | | | | 3.00 | | | | 2.90 | | | | 7.0 |
| 8.0 | 3.05 | 2.35 | | | 3.20 | | | | 3.00 | | | | 3.00 | | | | 2.90 | | | | 8.0 |
| 9.0 | 2.75 | 2.20 | | | 3.20 | | | | 3.00 | | | | 3.00 | | | | 2.90 | | | | 9.0 |
| 10.0 | 2.55 | 2.05 | | | 3.20 | | | | 3.00 | | | | 3.00 | | | | 2.90 | | | | 10.0 |
| 11.0 | 2.35 | 1.90 | | | 3.20 | | | | 3.00 | | | | 3.00 | | | | 2.90 | | | | 11.0 |
| 12.0 | 2.15 | 1.80 | 1.55 | | 3.20 | 2.20 | | | 3.00 | 2.20 | | | 3.00 | 2.25 | | | 2.90 | 2.20 | | | 12.0 |
| 13.0 | 2.00 | 1.70 | 1.50 | 0.90 | 3.10 | 2.15 | | | 3.00 | 2.15 | | | 3.00 | 2.15 | | | 2.90 | 2.15 | | | 13.0 |
| 14.0 | 1.85 | 1.65 | 1.45 | 0.90 | 2.95 | 2.10 | | | 2.95 | 2.10 | | | 3.00 | 2.10 | | | 2.90 | 2.10 | | | 14.0 |
| 16.0 | 1.65 | 1.50 | 1.35 | 0.85 | 2.70 | 1.95 | 1.50 | | 2.70 | 1.95 | 1.50 | | 2.80 | 2.00 | 1.50 | | 2.80 | 2.00 | 1.50 | | 16.0 |
| 18.0 | 1.50 | 1.40 | 1.30 | | 2.55 | 1.85 | 1.40 | 0.85 | 2.50 | 1.85 | 1.40 | 0.85 | 2.60 | 1.90 | 1.45 | 0.85 | 2.60 | 1.90 | 1.45 | 0.85 | 18.0 |
| 20.0 | 1.35 | 1.30 | | | 2.35 | 1.75 | 1.35 | 0.85 | 2.35 | 1.75 | 1.35 | 0.80 | 2.40 | 1.80 | 1.35 | 0.85 | 2.40 | 1.80 | 1.35 | 0.85 | 20.0 |
| 22.0 | | | | | 2.20 | 1.65 | 1.25 | 0.80 | 2.20 | 1.65 | 1.25 | 0.80 | 2.30 | 1.70 | 1.30 | 0.80 | 2.25 | 1.70 | 1.30 | 0.80 | 22.0 |
| 24.0 | | | | | 2.10 | 1.60 | 1.20 | 0.80 | 1.95 | 1.60 | 1.20 | 0.80 | 2.15 | 1.65 | 1.20 | 0.80 | 2.10 | 1.65 | 1.20 | 0.80 | 24.0 |
| 26.0 | | | | | 1.80 | 1.50 | 1.15 | 0.80 | 1.70 | 1.50 | 1.15 | 0.80 | 1.80 | 1.55 | 1.15 | 0.80 | 1.90 | 1.55 | 1.15 | 0.80 | 26.0 |
| 28.0 | | | | | 1.35 | 1.45 | 1.10 | 0.80 | 1.50 | 1.45 | 1.10 | 0.80 | 1.35 | 1.50 | 1.10 | 0.75 | 1.65 | 1.50 | 1.10 | 0.75 | 28.0 |
| 30.0 | | | | | 1.00 | 1.35 | 1.05 | | 1.35 | 1.35 | 1.05 | | 1.00 | 1.35 | 1.05 | 0.75 | 1.25 | 1.40 | 1.05 | 0.75 | 30.0 |
| 32.0 | | | | | 0.70 | 0.95 | 1.00 | | 1.20 | 1.20 | 1.00 | | 0.70 | 1.00 | 1.00 | | 0.95 | 1.25 | 1.00 | | 32.0 |
| 34.0 | | | | | 0.40 | 0.65 | 0.80 | | 1.00 | 1.05 | 0.95 | | 0.40 | 0.70 | 0.85 | | 0.70 | 0.95 | 1.00 | | 34.0 |
| 36.0 | | | | | | 0.40 | | | 0.75 | 0.90 | | | | 0.40 | 0.55 | | 0.45 | 0.65 | 0.75 | | 36.0 |
| 38.0 | | | | | | | | | 0.55 | 0.65 | | | | | | | | 0.40 | 0.50 | | 38.0 |
| 40.0 | | | | | | | | | | 0.45 | | | | | | | | | | | 40.0 |
| 42.0 | | | | | | | | | | | | | | | | | | | | | 42.0 |
| % 1 | 0 | 0 | 0 | 0 | 100 | 100 | 100 | 100 | 0 | 0 | 0 | 0 | 100 | 100 | 100 | 100 | 50 | 50 | 50 | 50 | 1 |
| % 2 | 0 | 0 | 0 | 0 | 68 | 68 | 68 | 68 | 100 | 100 | 100 | 100 | 83 | 83 | 83 | 83 | 100 | 100 | 100 | 100 | 2 |
| % 3 | 0 | 0 | 0 | 0 | 68 | 68 | 68 | 68 | 100 | 100 | 100 | 100 | 83 | 83 | 83 | 83 | 100 | 100 | 100 | 100 | 3 |
| % 4 | 0 | 0 | 0 | 0 | 68 | 68 | 68 | 68 | 100 | 100 | 100 | 100 | 83 | 83 | 83 | 83 | 100 | 100 | 100 | 100 | 4 |
| MODE | 1,2 | | | | 1 | | | | 2 | | | | 1 | | | | 2 | | | | MODE |
| [DEG] | 23 - 83.5 | 35 - 83.5 | 54 - 83.5 | 67 - 83.5 | 45 - 83.5 | 46 - 83.5 | 53 - 83.5 | 64 - 83.5 | 37 - 83.5 | 38 - 83.5 | 53 - 83.5 | 65 - 83.5 | 50 - 83.5 | 52 - 83.5 | 54 - 83.5 | 64 - 83.5 | 46 - 83.5 | 49 - 83.5 | 51 - 83.5 | 64 - 83.5 | [DEG] |

| m | 40.0 | 40.0 | 40.0 | 40.0 | 40.0 | 40.0 | 40.0 | 40.0 | 41.2 | 41.2 | 41.2 | 41.2 | | | | | | | | | m |
|---|---|---|---|---|---|---|---|---|---|---|---|---|---|---|---|---|---|---|---|---|---|
| ° | 5 | 25 | 45 | 60 | 5 | 25 | 45 | 60 | 5 | 25 | 45 | 60 | | | | | | | | | ° |
| m 2.0 | | | | | | | | | | | | | | | | | | | | | 2.0 |
| 3.0 | | | | | | | | | | | | | | | | | | | | | 3.0 |
| 3.5 | | | | | | | | | | | | | | | | | | | | | 3.5 |
| 4.0 | | | | | | | | | | | | | | | | | | | | | 4.0 |
| 4.5 | | | | | | | | | | | | | | | | | | | | | 4.5 |
| 5.0 | | | | | | | | | | | | | | | | | | | | | 5.0 |
| 5.5 | | | | | | | | | | | | | | | | | | | | | 5.5 |
| 6.0 | | | | | | | | | | | | | | | | | | | | | 6.0 |
| 6.5 | | | | | | | | | | | | | | | | | | | | | 6.5 |
| 7.0 | 3.00 | | | | 2.80 | | | | 2.50 | | | | | | | | | | | | 7.0 |
| 8.0 | 3.00 | | | | 2.80 | | | | 2.50 | | | | | | | | | | | | 8.0 |
| 9.0 | 3.00 | | | | 2.80 | | | | 2.50 | | | | | | | | | | | | 9.0 |
| 10.0 | 3.00 | | | | 2.80 | | | | 2.50 | | | | | | | | | | | | 10.0 |
| 11.0 | 3.00 | | | | 2.80 | | | | 2.50 | | | | | | | | | | | | 11.0 |
| 12.0 | 3.00 | | | | 2.80 | | | | 2.50 | | | | | | | | | | | | 12.0 |
| 13.0 | 3.00 | 2.15 | | | 2.80 | 2.15 | | | 2.50 | 2.15 | | | | | | | | | | | 13.0 |
| 14.0 | 3.00 | 2.10 | | | 2.80 | 2.10 | | | 2.50 | 2.10 | | | | | | | | | | | 14.0 |
| 16.0 | 2.85 | 2.00 | | | 2.80 | 2.00 | | | 2.50 | 2.00 | | | | | | | | | | | 16.0 |
| 18.0 | 2.65 | 1.90 | 1.45 | 0.85 | 2.65 | 1.90 | 1.45 | 0.85 | 2.50 | 1.90 | 1.45 | 0.85 | | | | | | | | | 18.0 |
| 20.0 | 2.45 | 1.80 | 1.40 | 0.85 | 2.45 | 1.80 | 1.40 | 0.85 | 2.50 | 1.80 | 1.40 | 0.85 | | | | | | | | | 20.0 |
| 22.0 | 2.30 | 1.75 | 1.30 | 0.80 | 2.30 | 1.75 | 1.30 | 0.80 | 2.35 | 1.75 | 1.30 | 0.80 | | | | | | | | | 22.0 |
| 24.0 | 2.20 | 1.65 | 1.25 | 0.80 | 2.20 | 1.65 | 1.25 | 0.80 | 2.20 | 1.65 | 1.25 | 0.80 | | | | | | | | | 24.0 |
| 26.0 | 1.80 | 1.60 | 1.20 | 0.80 | 1.85 | 1.60 | 1.20 | 0.75 | 1.75 | 1.60 | 1.20 | 0.75 | | | | | | | | | 26.0 |
| 28.0 | 1.35 | 1.50 | 1.10 | 0.75 | 1.45 | 1.50 | 1.10 | 0.75 | 1.35 | 1.55 | 1.15 | 0.75 | | | | | | | | | 28.0 |
| 30.0 | 1.00 | 1.35 | 1.05 | 0.75 | 1.05 | 1.40 | 1.05 | 0.75 | 1.00 | 1.35 | 1.10 | 0.75 | | | | | | | | | 30.0 |
| 32.0 | 0.70 | 1.00 | 1.05 | | 0.75 | 1.05 | 1.05 | | 0.70 | 1.00 | 1.05 | 0.75 | | | | | | | | | 32.0 |
| 34.0 | 0.40 | 0.70 | 0.90 | | 0.50 | 0.75 | 0.95 | | 0.40 | 0.70 | 0.90 | | | | | | | | | | 34.0 |
| 36.0 | | 0.45 | 0.55 | | | 0.50 | 0.65 | | | 0.45 | 0.60 | | | | | | | | | | 36.0 |
| 38.0 | | | | | | | | | | | | | | | | | | | | | 38.0 |
| 40.0 | | | | | | | | | | | | | | | | | | | | | 40.0 |
| 42.0 | | | | | | | | | | | | | | | | | | | | | 42.0 |
| % 1 | 100 | 100 | 100 | 100 | 84 | 84 | 84 | 84 | 100 | 100 | 100 | 100 | | | | | | | | | 1 |
| % 2 | 95 | 95 | 95 | 95 | 100 | 100 | 100 | 100 | 100 | 100 | 100 | 100 | | | | | | | | | 2 |
| % 3 | 95 | 95 | 95 | 95 | 100 | 100 | 100 | 100 | 100 | 100 | 100 | 100 | | | | | | | | | 3 |
| % 4 | 95 | 95 | 95 | 95 | 100 | 100 | 100 | 100 | 100 | 100 | 100 | 100 | | | | | | | | | 4 |
| MODE | 1 | | | | 2 | | | | 1,2 | | | | | | | | | | | | MODE |
| [DEG] | 53 - 83.5 | 55 - 83.5 | 58 - 83.5 | 67 - 83.5 | 53 - 83.5 | 55 - 83.5 | 58 - 83.5 | 61 - 83.5 | 54 - 83.5 | 56 - 83.5 | 59 - 83.5 | 65 - 83.5 | | | | | | | | | [DEG] |

| FAJ | 8.5 m | | 6.5 m | 360 ° | JPN |
|---|---|---|---|---|---|

| m | 10.3 | 10.3 | 10.3 | 10.3 | 33.6 | 33.6 | 33.6 | 33.6 | 33.6 | 33.6 | 33.6 | 33.6 | 37.3 | 37.3 | 37.3 | 37.3 | 37.3 | 37.3 | 37.3 | 37.3 | m |
|---|---|---|---|---|---|---|---|---|---|---|---|---|---|---|---|---|---|---|---|---|---|
| ° | 5 | 25 | 45 | 60 | 5 | 25 | 45 | 60 | 5 | 25 | 45 | 60 | 5 | 25 | 45 | 60 | 5 | 25 | 45 | 60 | ° |
| 2.0 | 4.20 | | | | | | | | | | | | | | | | | | | | 2.0 |
| 3.0 | 4.20 | | | | | | | | | | | | | | | | | | | | 3.0 |
| 3.5 | 4.20 | | | | | | | | | | | | | | | | | | | | 3.5 |
| 4.0 | 4.20 | | | | | | | | | | | | | | | | | | | | 4.0 |
| 4.5 | 4.20 | 4.20 | | | 4.20 | | | | | | | | | | | | | | | | 4.5 |
| 5.0 | 4.20 | 4.20 | | | 4.20 | | | | 4.20 | | | | | | | | | | | | 5.0 |
| 5.5 | 4.20 | 4.20 | | | 4.20 | | | | 4.20 | | | | 4.20 | | | | 4.20 | | | | 5.5 |
| 6.0 | 4.20 | 4.20 | | | 4.20 | | | | 4.20 | | | | 4.20 | | | | 4.20 | | | | 6.0 |
| 6.5 | 4.20 | 4.20 | 3.00 | | 4.20 | | | | 4.20 | | | | 4.20 | | | | 4.20 | | | | 6.5 |
| 7.0 | 4.20 | 4.20 | 2.90 | | 4.20 | | | | 4.20 | | | | 4.20 | | | | 4.20 | | | | 7.0 |
| 8.0 | 4.20 | 3.95 | 2.75 | 1.70 | 4.20 | 4.20 | | | 4.20 | 4.20 | | | 4.20 | | | | 4.20 | | | | 8.0 |
| 9.0 | 4.20 | 3.75 | 2.60 | 1.65 | 4.20 | 4.20 | | | 4.20 | 4.20 | | | 4.20 | 4.20 | | | 4.20 | 4.20 | | | 9.0 |
| 10.0 | 4.20 | 3.50 | 2.50 | 1.60 | 4.20 | 4.20 | 2.85 | | 4.20 | 4.20 | | | 4.20 | 4.20 | | | 4.20 | 4.20 | | | 10.0 |
| 11.0 | 3.95 | 3.30 | 2.45 | 1.60 | 4.20 | 4.20 | 2.75 | 1.65 | 4.20 | 4.10 | 2.75 | 1.65 | 4.20 | 4.20 | 2.80 | | 4.20 | 4.20 | 2.75 | | 11.0 |
| 12.0 | 3.70 | 3.15 | 2.35 | | 4.20 | 4.00 | 2.70 | 1.65 | 4.20 | 3.85 | 2.70 | 1.65 | 4.20 | 4.10 | 2.70 | 1.65 | 4.20 | 4.00 | 2.70 | 1.65 | 12.0 |
| 13.0 | 3.45 | 3.00 | 2.35 | | 4.20 | 3.85 | 2.65 | 1.60 | 4.20 | 3.65 | 2.65 | 1.60 | 4.20 | 3.95 | 2.65 | 1.60 | 4.20 | 3.75 | 2.65 | 1.60 | 13.0 |
| 14.0 | 3.25 | 2.90 | | | 4.20 | 3.70 | 2.60 | 1.60 | 4.05 | 3.45 | 2.60 | 1.60 | 4.20 | 3.80 | 2.60 | 1.60 | 4.20 | 3.60 | 2.60 | 1.60 | 14.0 |
| 16.0 | | | | | 4.20 | 3.45 | 2.45 | 1.55 | 3.50 | 3.10 | 2.45 | 1.55 | 4.15 | 3.55 | 2.50 | 1.55 | 4.20 | 3.25 | 2.50 | 1.55 | 16.0 |
| 18.0 | | | | | 3.25 | 3.20 | 2.35 | 1.55 | 3.00 | 2.80 | 2.35 | 1.55 | 3.20 | 3.30 | 2.40 | 1.55 | 3.45 | 2.95 | 2.40 | 1.55 | 18.0 |
| 20.0 | | | | | 2.45 | 2.85 | 2.25 | 1.50 | 2.65 | 2.50 | 2.25 | 1.50 | 2.40 | 2.85 | 2.30 | 1.50 | 2.80 | 2.70 | 2.30 | 1.50 | 20.0 |
| 22.0 | | | | | 1.80 | 2.15 | 2.15 | 1.50 | 2.30 | 2.20 | 2.15 | 1.50 | 1.80 | 2.15 | 2.20 | 1.50 | 2.15 | 2.40 | 2.20 | 1.50 | 22.0 |
| 24.0 | | | | | 1.25 | 1.55 | 1.75 | | 1.90 | 1.95 | 1.90 | | 1.30 | 1.60 | 1.85 | 1.50 | 1.60 | 1.90 | 2.05 | 1.45 | 24.0 |
| 26.0 | | | | | 0.85 | 1.10 | 1.25 | | 1.50 | 1.70 | 1.70 | | 0.85 | 1.15 | 1.30 | | 1.15 | 1.40 | 1.55 | | 26.0 |
| 28.0 | | | | | 0.45 | 0.65 | 0.80 | | 1.10 | 1.25 | 1.35 | | 0.50 | 0.70 | 0.85 | | 0.80 | 1.00 | 1.15 | | 28.0 |
| 30.0 | | | | | | | | | 0.80 | 0.95 | | | | 0.40 | 0.50 | | 0.50 | 0.65 | 0.75 | | 30.0 |
| 32.0 | | | | | | | | | 0.50 | 0.60 | | | | | | | | | 0.45 | | 32.0 |
| 34.0 | | | | | | | | | | | | | | | | | | | | | 34.0 |
| 36.0 | | | | | | | | | | | | | | | | | | | | | 36.0 |
| 38.0 | | | | | | | | | | | | | | | | | | | | | 38.0 |
| 40.0 | | | | | | | | | | | | | | | | | | | | | 40.0 |
| 42.0 | | | | | | | | | | | | | | | | | | | | | 42.0 |
| 1 | 0 | 0 | 0 | 0 | 100 | 100 | 100 | 100 | 0 | 0 | 0 | 0 | 100 | 100 | 100 | 100 | 50 | 50 | 50 | 50 | 1 |
| 2 | 0 | 0 | 0 | 0 | 68 | 68 | 68 | 68 | 100 | 100 | 100 | 100 | 83 | 83 | 83 | 83 | 100 | 100 | 100 | 100 | 2 |
| 3 | 0 | 0 | 0 | 0 | 68 | 68 | 68 | 68 | 100 | 100 | 100 | 100 | 83 | 83 | 83 | 83 | 100 | 100 | 100 | 100 | 3 |
| 4 | 0 | 0 | 0 | 0 | 68 | 68 | 68 | 68 | 100 | 100 | 100 | 100 | 83 | 83 | 83 | 83 | 100 | 100 | 100 | 100 | 4 |
| MODE | 1,2 | | | | 1 | | | | 2 | | | | 1 | | | | 2 | | | | MODE |
| [DEG] | 30 - 83.5 | 38 - 83.5 | 49 - 83.5 | 63 - 83.5 | 47 - 83.5 | 50 - 83.5 | 52 - 83.5 | 64 - 83.5 | 38 - 83.5 | 42 - 83.5 | 53 - 83.5 | 65 - 83.5 | 52 - 83.5 | 52 - 83.5 | 54 - 83.5 | 64 - 83.5 | 48 - 83.5 | 52 - 83.5 | 50 - 83.5 | 64 - 83.5 | [DEG] |

| m | 40.0 | 40.0 | 40.0 | 40.0 | 40.0 | 40.0 | 40.0 | 40.0 | 41.2 | 41.2 | 41.2 | 41.2 | | | | | | | | | m |
|---|---|---|---|---|---|---|---|---|---|---|---|---|---|---|---|---|---|---|---|---|---|
| ° | 5 | 25 | 45 | 60 | 5 | 25 | 45 | 60 | 5 | 25 | 45 | 60 | | | | | | | | | ° |
| 2.0 | | | | | | | | | | | | | | | | | | | | | 2.0 |
| 3.0 | | | | | | | | | | | | | | | | | | | | | 3.0 |
| 3.5 | | | | | | | | | | | | | | | | | | | | | 3.5 |
| 4.0 | | | | | | | | | | | | | | | | | | | | | 4.0 |
| 4.5 | | | | | | | | | | | | | | | | | | | | | 4.5 |
| 5.0 | | | | | | | | | | | | | | | | | | | | | 5.0 |
| 5.5 | | | | | | | | | | | | | | | | | | | | | 5.5 |
| 6.0 | 4.00 | | | | 4.00 | | | | 3.80 | | | | | | | | | | | | 6.0 |
| 6.5 | 4.00 | | | | 4.00 | | | | 3.80 | | | | | | | | | | | | 6.5 |
| 7.0 | 4.00 | | | | 4.00 | | | | 3.80 | | | | | | | | | | | | 7.0 |
| 8.0 | 4.00 | | | | 4.00 | | | | 3.80 | | | | | | | | | | | | 8.0 |
| 9.0 | 4.00 | | | | 4.00 | | | | 3.80 | | | | | | | | | | | | 9.0 |
| 10.0 | 4.00 | 4.00 | | | 4.00 | 4.00 | | | 3.80 | 3.80 | | | | | | | | | | | 10.0 |
| 11.0 | 4.00 | 4.00 | | | 4.00 | 4.00 | | | 3.80 | 3.80 | | | | | | | | | | | 11.0 |
| 12.0 | 4.00 | 4.00 | 2.70 | 1.65 | 4.00 | 4.00 | 2.70 | 1.65 | 3.80 | 3.80 | 2.75 | | | | | | | | | | 12.0 |
| 13.0 | 4.00 | 4.00 | 2.65 | 1.60 | 4.00 | 3.85 | 2.65 | 1.60 | 3.80 | 3.80 | 2.65 | 1.60 | | | | | | | | | 13.0 |
| 14.0 | 4.00 | 3.85 | 2.60 | 1.60 | 4.00 | 3.65 | 2.60 | 1.60 | 3.80 | 3.70 | 2.60 | 1.60 | | | | | | | | | 14.0 |
| 16.0 | 4.00 | 3.60 | 2.50 | 1.55 | 3.95 | 3.30 | 2.50 | 1.55 | 3.80 | 3.35 | 2.50 | 1.55 | | | | | | | | | 16.0 |
| 18.0 | 3.15 | 3.35 | 2.40 | 1.55 | 3.25 | 3.05 | 2.40 | 1.55 | 3.15 | 3.05 | 2.40 | 1.55 | | | | | | | | | 18.0 |
| 20.0 | 2.40 | 2.80 | 2.30 | 1.50 | 2.50 | 2.80 | 2.30 | 1.50 | 2.40 | 2.80 | 2.30 | 1.50 | | | | | | | | | 20.0 |
| 22.0 | 1.80 | 2.15 | 2.20 | 1.50 | 1.90 | 2.25 | 2.20 | 1.50 | 1.75 | 2.15 | 2.20 | 1.50 | | | | | | | | | 22.0 |
| 24.0 | 1.30 | 1.60 | 1.85 | 1.45 | 1.40 | 1.70 | 1.95 | 1.45 | 1.25 | 1.60 | 1.85 | 1.45 | | | | | | | | | 24.0 |
| 26.0 | 0.85 | 1.15 | 1.35 | | 0.95 | 1.25 | 1.40 | | 0.85 | 1.15 | 1.35 | 1.40 | | | | | | | | | 26.0 |
| 28.0 | 0.50 | 0.75 | 0.90 | | 0.60 | 0.85 | 1.00 | | 0.50 | 0.75 | 0.90 | | | | | | | | | | 28.0 |
| 30.0 | | 0.40 | 0.50 | | | 0.50 | 0.60 | | | 0.40 | 0.50 | | | | | | | | | | 30.0 |
| 32.0 | | | | | | | | | | | | | | | | | | | | | 32.0 |
| 34.0 | | | | | | | | | | | | | | | | | | | | | 34.0 |
| 36.0 | | | | | | | | | | | | | | | | | | | | | 36.0 |
| 38.0 | | | | | | | | | | | | | | | | | | | | | 38.0 |
| 40.0 | | | | | | | | | | | | | | | | | | | | | 40.0 |
| 42.0 | | | | | | | | | | | | | | | | | | | | | 42.0 |
| 1 | 100 | 100 | 100 | 100 | 84 | 84 | 84 | 84 | 100 | 100 | 100 | 100 | | | | | | | | | 1 |
| 2 | 95 | 95 | 95 | 95 | 100 | 100 | 100 | 100 | 100 | 100 | 100 | 100 | | | | | | | | | 2 |
| 3 | 95 | 95 | 95 | 95 | 100 | 100 | 100 | 100 | 100 | 100 | 100 | 100 | | | | | | | | | 3 |
| 4 | 95 | 95 | 95 | 95 | 100 | 100 | 100 | 100 | 100 | 100 | 100 | 100 | | | | | | | | | 4 |
| MODE | 1 | | | | 2 | | | | 1,2 | | | | | | | | | | | | MODE |
| [DEG] | 55 - 83.5 | 55 - 83.5 | 57 - 83.5 | 67 - 83.5 | 54 - 83.5 | 55 - 83.5 | 57 - 83.5 | 67 - 83.5 | 56 - 83.5 | 56 - 83.5 | 58 - 83.5 | 64 - 83.5 | | | | | | | | | [DEG] |

| FAJ | 13.7 m | | 6.5 m | 360 ° | JPN |
|---|---|---|---|---|---|

| m | 10.3 | 10.3 | 10.3 | 10.3 | 33.6 | 33.6 | 33.6 | 33.6 | 33.6 | 33.6 | 33.6 | 33.6 | 37.3 | 37.3 | 37.3 | 37.3 | 37.3 | 37.3 | 37.3 | 37.3 | m |
|---|---|---|---|---|---|---|---|---|---|---|---|---|---|---|---|---|---|---|---|---|---|
| ° | 5 | 25 | 45 | 60 | 5 | 25 | 45 | 60 | 5 | 25 | 45 | 60 | 5 | 25 | 45 | 60 | 5 | 25 | 45 | 60 | ° |
| m 2.0 | | | | | | | | | | | | | | | | | | | | | 2.0 |
| 3.0 | 3.20 | | | | | | | | | | | | | | | | | | | | 3.0 |
| 3.5 | 3.20 | | | | | | | | | | | | | | | | | | | | 3.5 |
| 4.0 | 3.20 | | | | | | | | | | | | | | | | | | | | 4.0 |
| 4.5 | 3.20 | | | | | | | | | | | | | | | | | | | | 4.5 |
| 5.0 | 3.20 | | | | | | | | | | | | | | | | | | | | 5.0 |
| 5.5 | 3.20 | | | | | | | | | | | | | | | | | | | | 5.5 |
| 6.0 | 3.20 | | | | 3.20 | | | | 3.00 | | | | | | | | | | | | 6.0 |
| 6.5 | 3.20 | | | | 3.20 | | | | 3.00 | | | | 3.00 | | | | 2.90 | | | | 6.5 |
| 7.0 | 3.20 | | | | 3.20 | | | | 3.00 | | | | 3.00 | | | | 2.90 | | | | 7.0 |
| 8.0 | 3.05 | 2.35 | | | 3.20 | | | | 3.00 | | | | 3.00 | | | | 2.90 | | | | 8.0 |
| 9.0 | 2.75 | 2.20 | | | 3.20 | | | | 3.00 | | | | 3.00 | | | | 2.90 | | | | 9.0 |
| 10.0 | 2.55 | 2.05 | | | 3.20 | | | | 3.00 | | | | 3.00 | | | | 2.90 | | | | 10.0 |
| 11.0 | 2.35 | 1.90 | | | 3.20 | | | | 3.00 | | | | 3.00 | | | | 2.90 | | | | 11.0 |
| 12.0 | 2.15 | 1.80 | 1.55 | | 3.20 | 2.20 | | | 3.00 | 2.20 | | | 3.00 | 2.25 | | | 2.90 | 2.20 | | | 12.0 |
| 13.0 | 2.00 | 1.70 | 1.50 | 0.90 | 3.10 | 2.15 | | | 3.00 | 2.15 | | | 3.00 | 2.15 | | | 2.90 | 2.15 | | | 13.0 |
| 14.0 | 1.85 | 1.65 | 1.45 | 0.90 | 2.95 | 2.10 | | | 2.95 | 2.10 | | | 3.00 | 2.10 | | | 2.90 | 2.10 | | | 14.0 |
| 16.0 | 1.65 | 1.50 | 1.35 | 0.85 | 2.70 | 1.95 | 1.50 | | 2.70 | 1.95 | 1.50 | | 2.80 | 2.00 | 1.50 | | 2.80 | 2.00 | 1.50 | | 16.0 |
| 18.0 | 1.50 | 1.40 | 1.30 | | 2.55 | 1.85 | 1.40 | 0.85 | 2.50 | 1.85 | 1.40 | 0.85 | 2.60 | 1.90 | 1.45 | 0.85 | 2.60 | 1.90 | 1.45 | 0.85 | 18.0 |
| 20.0 | 1.35 | 1.30 | | | 2.35 | 1.75 | 1.35 | 0.85 | 2.35 | 1.75 | 1.35 | 0.80 | 2.40 | 1.80 | 1.35 | 0.85 | 2.40 | 1.80 | 1.35 | 0.85 | 20.0 |
| 22.0 | | | | | 2.20 | 1.65 | 1.25 | 0.80 | 2.20 | 1.65 | 1.25 | 0.80 | 2.25 | 1.70 | 1.30 | 0.80 | 2.25 | 1.70 | 1.30 | 0.80 | 22.0 |
| 24.0 | | | | | 1.75 | 1.60 | 1.20 | 0.80 | 1.95 | 1.60 | 1.20 | 0.80 | 1.75 | 1.65 | 1.20 | 0.80 | 2.05 | 1.65 | 1.20 | 0.80 | 24.0 |
| 26.0 | | | | | 1.30 | 1.50 | 1.15 | 0.80 | 1.70 | 1.50 | 1.15 | 0.80 | 1.30 | 1.55 | 1.15 | 0.80 | 1.60 | 1.55 | 1.15 | 0.80 | 26.0 |
| 28.0 | | | | | 0.95 | 1.30 | 1.10 | 0.80 | 1.50 | 1.45 | 1.10 | 0.80 | 0.95 | 1.30 | 1.10 | 0.75 | 1.20 | 1.50 | 1.10 | 0.75 | 28.0 |
| 30.0 | | | | | 0.60 | 0.95 | 1.05 | | 1.15 | 1.35 | 1.05 | | 0.60 | 0.95 | 1.05 | 0.75 | 0.90 | 1.20 | 1.05 | 0.75 | 30.0 |
| 32.0 | | | | | | 0.60 | 0.80 | | 0.90 | 1.10 | 1.00 | | | 0.65 | 0.85 | | 0.60 | 0.85 | 1.00 | | 32.0 |
| 34.0 | | | | | | | 0.45 | | 0.65 | 0.85 | 0.95 | | | | 0.50 | | | 0.60 | 0.75 | | 34.0 |
| 36.0 | | | | | | | | | 0.45 | 0.60 | | | | | | | | | 0.45 | | 36.0 |
| 38.0 | | | | | | | | | | | | | | | | | | | | | 38.0 |
| 40.0 | | | | | | | | | | | | | | | | | | | | | 40.0 |
| 42.0 | | | | | | | | | | | | | | | | | | | | | 42.0 |
| % 1 | 0 | 0 | 0 | 0 | 100 | 100 | 100 | 100 | 0 | 0 | 0 | 0 | 100 | 100 | 100 | 100 | 50 | 50 | 50 | 50 | 1 |
| % 2 | 0 | 0 | 0 | 0 | 68 | 68 | 68 | 68 | 100 | 100 | 100 | 100 | 83 | 83 | 83 | 83 | 100 | 100 | 100 | 100 | 2 |
| % 3 | 0 | 0 | 0 | 0 | 68 | 68 | 68 | 68 | 100 | 100 | 100 | 100 | 83 | 83 | 83 | 83 | 100 | 100 | 100 | 100 | 3 |
| % 4 | 0 | 0 | 0 | 0 | 68 | 68 | 68 | 68 | 100 | 100 | 100 | 100 | 83 | 83 | 83 | 83 | 100 | 100 | 100 | 100 | 4 |
| MODE | 1,2 | | | | 1 | | | | 2 | | | | 1 | | | | 2 | | | | MODE |
| [DEG] | 23 - 83.5 | 35 - 83.5 | 54 - 83.5 | 67 - 83.5 | 51 - 83.5 | 54 - 83.5 | 53 - 83.5 | 64 - 83.5 | 41 - 83.5 | 47 - 83.5 | 53 - 83.5 | 65 - 83.5 | 55 - 83.5 | 58 - 83.5 | 58 - 83.5 | 64 - 83.5 | 53 - 83.5 | 55 - 83.5 | 55 - 83.5 | 64 - 83.5 | [DEG] |

| m | 40.0 | 40.0 | 40.0 | 40.0 | 40.0 | 40.0 | 40.0 | 40.0 | 41.2 | 41.2 | 41.2 | 41.2 | | | | | | | | | m |
|---|---|---|---|---|---|---|---|---|---|---|---|---|---|---|---|---|---|---|---|---|---|
| ° | 5 | 25 | 45 | 60 | 5 | 25 | 45 | 60 | 5 | 25 | 45 | 60 | | | | | | | | | ° |
| m 2.0 | | | | | | | | | | | | | | | | | | | | | 2.0 |
| 3.0 | | | | | | | | | | | | | | | | | | | | | 3.0 |
| 3.5 | | | | | | | | | | | | | | | | | | | | | 3.5 |
| 4.0 | | | | | | | | | | | | | | | | | | | | | 4.0 |
| 4.5 | | | | | | | | | | | | | | | | | | | | | 4.5 |
| 5.0 | | | | | | | | | | | | | | | | | | | | | 5.0 |
| 5.5 | | | | | | | | | | | | | | | | | | | | | 5.5 |
| 6.0 | | | | | | | | | | | | | | | | | | | | | 6.0 |
| 6.5 | | | | | | | | | | | | | | | | | | | | | 6.5 |
| 7.0 | 3.00 | | | | 2.80 | | | | 2.50 | | | | | | | | | | | | 7.0 |
| 8.0 | 3.00 | | | | 2.80 | | | | 2.50 | | | | | | | | | | | | 8.0 |
| 9.0 | 3.00 | | | | 2.80 | | | | 2.50 | | | | | | | | | | | | 9.0 |
| 10.0 | 3.00 | | | | 2.80 | | | | 2.50 | | | | | | | | | | | | 10.0 |
| 11.0 | 3.00 | | | | 2.80 | | | | 2.50 | | | | | | | | | | | | 11.0 |
| 12.0 | 3.00 | | | | 2.80 | | | | 2.50 | | | | | | | | | | | | 12.0 |
| 13.0 | 3.00 | 2.15 | | | 2.80 | 2.15 | | | 2.50 | 2.15 | | | | | | | | | | | 13.0 |
| 14.0 | 3.00 | 2.10 | | | 2.80 | 2.10 | | | 2.50 | 2.10 | | | | | | | | | | | 14.0 |
| 16.0 | 2.85 | 2.00 | | | 2.80 | 2.00 | | | 2.50 | 2.00 | | | | | | | | | | | 16.0 |
| 18.0 | 2.65 | 1.90 | 1.45 | 0.85 | 2.65 | 1.90 | 1.45 | 0.85 | 2.50 | 1.90 | 1.45 | 0.85 | | | | | | | | | 18.0 |
| 20.0 | 2.45 | 1.80 | 1.40 | 0.85 | 2.45 | 1.80 | 1.40 | 0.85 | 2.50 | 1.80 | 1.40 | 0.85 | | | | | | | | | 20.0 |
| 22.0 | 2.20 | 1.75 | 1.30 | 0.80 | 2.30 | 1.75 | 1.30 | 0.80 | 2.20 | 1.75 | 1.30 | 0.80 | | | | | | | | | 22.0 |
| 24.0 | 1.70 | 1.65 | 1.25 | 0.80 | 1.80 | 1.65 | 1.25 | 0.80 | 1.70 | 1.65 | 1.25 | 0.80 | | | | | | | | | 24.0 |
| 26.0 | 1.25 | 1.60 | 1.20 | 0.80 | 1.35 | 1.60 | 1.20 | 0.75 | 1.25 | 1.60 | 1.20 | 0.75 | | | | | | | | | 26.0 |
| 28.0 | 0.90 | 1.30 | 1.10 | 0.75 | 1.00 | 1.40 | 1.10 | 0.75 | 0.90 | 1.30 | 1.15 | 0.75 | | | | | | | | | 28.0 |
| 30.0 | 0.60 | 0.95 | 1.05 | 0.75 | 0.70 | 1.05 | 1.05 | 0.75 | 0.60 | 0.95 | 1.10 | 0.75 | | | | | | | | | 30.0 |
| 32.0 | | 0.65 | 0.85 | | 0.40 | 0.70 | 0.90 | | | 0.65 | 0.85 | 0.75 | | | | | | | | | 32.0 |
| 34.0 | | | 0.55 | | | 0.45 | 0.60 | | | | 0.55 | | | | | | | | | | 34.0 |
| 36.0 | | | | | | | | | | | | | | | | | | | | | 36.0 |
| 38.0 | | | | | | | | | | | | | | | | | | | | | 38.0 |
| 40.0 | | | | | | | | | | | | | | | | | | | | | 40.0 |
| 42.0 | | | | | | | | | | | | | | | | | | | | | 42.0 |
| % 1 | 100 | 100 | 100 | 100 | 84 | 84 | 84 | 84 | 100 | 100 | 100 | 100 | | | | | | | | | 1 |
| % 2 | 95 | 95 | 95 | 95 | 100 | 100 | 100 | 100 | 100 | 100 | 100 | 100 | | | | | | | | | 2 |
| % 3 | 95 | 95 | 95 | 95 | 100 | 100 | 100 | 100 | 100 | 100 | 100 | 100 | | | | | | | | | 3 |
| % 4 | 95 | 95 | 95 | 95 | 100 | 100 | 100 | 100 | 100 | 100 | 100 | 100 | | | | | | | | | 4 |
| MODE | 1 | | | | 2 | | | | 1,2 | | | | | | | | | | | | MODE |
| [DEG] | 58 - 83.5 | 60 - 83.5 | 60 - 83.5 | 67 - 83.5 | 55 - 83.5 | 58 - 83.5 | 61 - 83.5 | 67 - 83.5 | 59 - 83.5 | 61 - 83.5 | 62 - 83.5 | 65 - 83.5 | | | | | | | | | [DEG] |

| FAJ | 8.5 m | | 5.28 m | 360 ° | JPN |
|---|---|---|---|---|---|

| m | 10.3 | 10.3 | 10.3 | 10.3 | 33.6 | 33.6 | 33.6 | 33.6 | 33.6 | 33.6 | 33.6 | 33.6 | 37.3 | 37.3 | 37.3 | 37.3 | 37.3 | 37.3 | 37.3 | 37.3 | m |
|---|---|---|---|---|---|---|---|---|---|---|---|---|---|---|---|---|---|---|---|---|---|
| ° | 5 | 25 | 45 | 60 | 5 | 25 | 45 | 60 | 5 | 25 | 45 | 60 | 5 | 25 | 45 | 60 | 5 | 25 | 45 | 60 | ° |
| 2.0 | 4.20 | | | | | | | | | | | | | | | | | | | | 2.0 |
| 3.0 | 4.20 | | | | | | | | | | | | | | | | | | | | 3.0 |
| 3.5 | 4.20 | | | | | | | | | | | | | | | | | | | | 3.5 |
| 4.0 | 4.20 | | | | | | | | | | | | | | | | | | | | 4.0 |
| 4.5 | 4.20 | 4.20 | | | 4.20 | | | | | | | | | | | | | | | | 4.5 |
| 5.0 | 4.20 | 4.20 | | | 4.20 | | | | 4.20 | | | | | | | | | | | | 5.0 |
| 5.5 | 4.20 | 4.20 | | | 4.20 | | | | 4.20 | | | | 4.20 | | | | 4.20 | | | | 5.5 |
| 6.0 | 4.20 | 4.20 | | | 4.20 | | | | 4.20 | | | | 4.20 | | | | 4.20 | | | | 6.0 |
| 6.5 | 4.20 | 4.20 | 3.00 | | 4.20 | | | | 4.20 | | | | 4.20 | | | | 4.20 | | | | 6.5 |
| 7.0 | 4.20 | 4.20 | 2.90 | | 4.20 | | | | 4.20 | | | | 4.20 | | | | 4.20 | | | | 7.0 |
| 8.0 | 4.20 | 3.95 | 2.75 | 1.70 | 4.20 | 4.20 | | | 4.20 | 4.20 | | | 4.20 | | | | 4.20 | | | | 8.0 |
| 9.0 | 4.20 | 3.75 | 2.60 | 1.65 | 4.20 | 4.20 | | | 4.20 | 4.20 | | | 4.20 | 4.20 | | | 4.20 | 4.20 | | | 9.0 |
| 10.0 | 4.20 | 3.50 | 2.50 | 1.60 | 4.20 | 4.20 | 2.85 | | 4.20 | 4.20 | | | 4.20 | 4.20 | | | 4.20 | 4.20 | | | 10.0 |
| 11.0 | 3.95 | 3.30 | 2.45 | 1.60 | 4.20 | 4.20 | 2.75 | 1.65 | 4.20 | 4.10 | 2.75 | 1.65 | 4.20 | 4.20 | 2.80 | | 4.20 | 4.20 | 2.75 | | 11.0 |
| 12.0 | 3.70 | 3.15 | 2.35 | | 4.20 | 4.00 | 2.70 | 1.65 | 4.20 | 3.85 | 2.70 | 1.65 | 4.20 | 4.10 | 2.70 | 1.65 | 4.20 | 4.00 | 2.70 | 1.65 | 12.0 |
| 13.0 | 3.45 | 3.00 | 2.35 | | 4.20 | 3.85 | 2.65 | 1.60 | 4.20 | 3.65 | 2.65 | 1.60 | 4.20 | 3.95 | 2.65 | 1.60 | 4.20 | 3.75 | 2.65 | 1.60 | 13.0 |
| 14.0 | 3.25 | 2.90 | | | 3.65 | 3.70 | 2.60 | 1.60 | 4.05 | 3.45 | 2.60 | 1.60 | 3.60 | 3.80 | 2.60 | 1.60 | 4.00 | 3.60 | 2.60 | 1.60 | 14.0 |
| 16.0 | | | | | 2.65 | 3.20 | 2.45 | 1.55 | 3.45 | 3.10 | 2.45 | 1.55 | 2.60 | 3.15 | 2.50 | 1.55 | 3.00 | 3.25 | 2.50 | 1.55 | 16.0 |
| 18.0 | | | | | 1.90 | 2.35 | 2.35 | 1.55 | 2.65 | 2.80 | 2.35 | 1.55 | 1.85 | 2.35 | 2.40 | 1.55 | 2.20 | 2.65 | 2.40 | 1.55 | 18.0 |
| 20.0 | | | | | 1.25 | 1.65 | 1.95 | 1.50 | 2.00 | 2.30 | 2.25 | 1.50 | 1.25 | 1.65 | 1.95 | 1.50 | 1.60 | 2.00 | 2.25 | 1.50 | 20.0 |
| 22.0 | | | | | 0.75 | 1.10 | 1.35 | 1.45 | 1.50 | 1.75 | 1.95 | 1.50 | 0.75 | 1.10 | 1.35 | 1.45 | 1.10 | 1.45 | 1.65 | 1.50 | 22.0 |
| 24.0 | | | | | | 0.65 | 0.85 | | 1.05 | 1.30 | 1.45 | | | 0.65 | 0.85 | 0.95 | 0.70 | 0.95 | 1.15 | 1.25 | 24.0 |
| 26.0 | | | | | | | 0.40 | | 0.70 | 0.90 | 1.00 | | | | 0.45 | | | 0.60 | 0.75 | | 26.0 |
| 28.0 | | | | | | | | | 0.40 | 0.55 | 0.65 | | | | | | | | 0.40 | | 28.0 |
| 30.0 | | | | | | | | | | | | | | | | | | | | | 30.0 |
| 32.0 | | | | | | | | | | | | | | | | | | | | | 32.0 |
| 34.0 | | | | | | | | | | | | | | | | | | | | | 34.0 |
| 36.0 | | | | | | | | | | | | | | | | | | | | | 36.0 |
| 38.0 | | | | | | | | | | | | | | | | | | | | | 38.0 |
| 40.0 | | | | | | | | | | | | | | | | | | | | | 40.0 |
| 42.0 | | | | | | | | | | | | | | | | | | | | | 42.0 |
| % 1 | 0 | 0 | 0 | 0 | 100 | 100 | 100 | 100 | 0 | 0 | 0 | 0 | 100 | 100 | 100 | 100 | 50 | 50 | 50 | 50 | 1 |
| % 2 | 0 | 0 | 0 | 0 | 68 | 68 | 68 | 68 | 100 | 100 | 100 | 100 | 83 | 83 | 83 | 83 | 100 | 100 | 100 | 100 | 2 |
| % 3 | 0 | 0 | 0 | 0 | 68 | 68 | 68 | 68 | 100 | 100 | 100 | 100 | 83 | 83 | 83 | 83 | 100 | 100 | 100 | 100 | 3 |
| % 4 | 0 | 0 | 0 | 0 | 68 | 68 | 68 | 68 | 100 | 100 | 100 | 100 | 83 | 83 | 83 | 83 | 100 | 100 | 100 | 100 | 4 |
| MODE | 1,2 | | | | 1 | | | | 2 | | | | 1 | | | | 2 | | | | MODE |
| [DEG] | 30 - 83.5 | 38 - 83.5 | 49 - 83.5 | 63 - 83.5 | 58 - 83.5 | 58 - 83.5 | 56 - 83.5 | 64 - 83.5 | 47 - 83.5 | 51 - 83.5 | 53 - 83.5 | 65 - 83.5 | 61 - 83.5 | 61 - 83.5 | 60 - 83.5 | 64 - 83.5 | 58 - 83.5 | 58 - 83.5 | 57 - 83.5 | 64 - 83.5 | [DEG] |

| m | 40.0 | 40.0 | 40.0 | 40.0 | 40.0 | 40.0 | 40.0 | 40.0 | 41.2 | 41.2 | 41.2 | 41.2 | | | | | | | | | m |
|---|---|---|---|---|---|---|---|---|---|---|---|---|---|---|---|---|---|---|---|---|---|
| ° | 5 | 25 | 45 | 60 | 5 | 25 | 45 | 60 | 5 | 25 | 45 | 60 | | | | | | | | | ° |
| 2.0 | | | | | | | | | | | | | | | | | | | | | 2.0 |
| 3.0 | | | | | | | | | | | | | | | | | | | | | 3.0 |
| 3.5 | | | | | | | | | | | | | | | | | | | | | 3.5 |
| 4.0 | | | | | | | | | | | | | | | | | | | | | 4.0 |
| 4.5 | | | | | | | | | | | | | | | | | | | | | 4.5 |
| 5.0 | | | | | | | | | | | | | | | | | | | | | 5.0 |
| 5.5 | | | | | | | | | | | | | | | | | | | | | 5.5 |
| 6.0 | 4.00 | | | | 4.00 | | | | 3.80 | | | | | | | | | | | | 6.0 |
| 6.5 | 4.00 | | | | 4.00 | | | | 3.80 | | | | | | | | | | | | 6.5 |
| 7.0 | 4.00 | | | | 4.00 | | | | 3.80 | | | | | | | | | | | | 7.0 |
| 8.0 | 4.00 | | | | 4.00 | | | | 3.80 | | | | | | | | | | | | 8.0 |
| 9.0 | 4.00 | | | | 4.00 | | | | 3.80 | | | | | | | | | | | | 9.0 |
| 10.0 | 4.00 | 4.00 | | | 4.00 | 4.00 | | | 3.80 | 3.80 | | | | | | | | | | | 10.0 |
| 11.0 | 4.00 | 4.00 | | | 4.00 | 4.00 | | | 3.80 | 3.80 | | | | | | | | | | | 11.0 |
| 12.0 | 4.00 | 4.00 | 2.70 | 1.65 | 4.00 | 4.00 | 2.70 | 1.65 | 3.80 | 3.80 | 2.75 | | | | | | | | | | 12.0 |
| 13.0 | 4.00 | 4.00 | 2.65 | 1.60 | 4.00 | 3.85 | 2.65 | 1.60 | 3.80 | 3.80 | 2.65 | 1.60 | | | | | | | | | 13.0 |
| 14.0 | 3.55 | 3.85 | 2.60 | 1.60 | 3.65 | 3.65 | 2.60 | 1.60 | 3.50 | 3.70 | 2.60 | 1.60 | | | | | | | | | 14.0 |
| 16.0 | 2.60 | 3.15 | 2.50 | 1.55 | 2.70 | 3.25 | 2.50 | 1.55 | 2.55 | 3.10 | 2.50 | 1.55 | | | | | | | | | 16.0 |
| 18.0 | 1.85 | 2.30 | 2.40 | 1.55 | 1.95 | 2.40 | 2.40 | 1.55 | 1.80 | 2.30 | 2.40 | 1.55 | | | | | | | | | 18.0 |
| 20.0 | 1.25 | 1.65 | 1.95 | 1.50 | 1.35 | 1.75 | 2.05 | 1.50 | 1.20 | 1.65 | 1.95 | 1.50 | | | | | | | | | 20.0 |
| 22.0 | 0.75 | 1.10 | 1.35 | 1.50 | 0.85 | 1.20 | 1.45 | 1.50 | 0.75 | 1.10 | 1.35 | 1.50 | | | | | | | | | 22.0 |
| 24.0 | | 0.65 | 0.85 | 0.95 | 0.45 | 0.75 | 0.95 | 1.05 | | 0.65 | 0.90 | 0.95 | | | | | | | | | 24.0 |
| 26.0 | | | 0.45 | | | | 0.55 | | | | 0.45 | | | | | | | | | | 26.0 |
| 28.0 | | | | | | | | | | | | | | | | | | | | | 28.0 |
| 30.0 | | | | | | | | | | | | | | | | | | | | | 30.0 |
| 32.0 | | | | | | | | | | | | | | | | | | | | | 32.0 |
| 34.0 | | | | | | | | | | | | | | | | | | | | | 34.0 |
| 36.0 | | | | | | | | | | | | | | | | | | | | | 36.0 |
| 38.0 | | | | | | | | | | | | | | | | | | | | | 38.0 |
| 40.0 | | | | | | | | | | | | | | | | | | | | | 40.0 |
| 42.0 | | | | | | | | | | | | | | | | | | | | | 42.0 |
| % 1 | 100 | 100 | 100 | 100 | 84 | 84 | 84 | 84 | 100 | 100 | 100 | 100 | | | | | | | | | 1 |
| % 2 | 95 | 95 | 95 | 95 | 100 | 100 | 100 | 100 | 100 | 100 | 100 | 100 | | | | | | | | | 2 |
| % 3 | 95 | 95 | 95 | 95 | 100 | 100 | 100 | 100 | 100 | 100 | 100 | 100 | | | | | | | | | 3 |
| % 4 | 95 | 95 | 95 | 95 | 100 | 100 | 100 | 100 | 100 | 100 | 100 | 100 | | | | | | | | | 4 |
| MODE | 1 | | | | 2 | | | | 1,2 | | | | | | | | | | | | MODE |
| [DEG] | 64 - 83.5 | 63 - 83.5 | 63 - 83.5 | 67 - 83.5 | 59 - 83.5 | 64 - 83.5 | 63 - 83.5 | 67 - 83.5 | 64 - 83.5 | 64 - 83.5 | 64 - 83.5 | 67 - 83.5 | | | | | | | | | [DEG] |

| FAJ | 13.7 m | | 5.28 m | 360 ° | JPN |
|---|---|---|---|---|---|

| m | 10.3 | 10.3 | 10.3 | 10.3 | 33.6 | 33.6 | 33.6 | 33.6 | 33.6 | 33.6 | 33.6 | 33.6 | 37.3 | 37.3 | 37.3 | 37.3 | 37.3 | 37.3 | 37.3 | 37.3 | m |
|---|---|---|---|---|---|---|---|---|---|---|---|---|---|---|---|---|---|---|---|---|---|
| ° | 5 | 25 | 45 | 60 | 5 | 25 | 45 | 60 | 5 | 25 | 45 | 60 | 5 | 25 | 45 | 60 | 5 | 25 | 45 | 60 | ° |
| 2.0 | | | | | | | | | | | | | | | | | | | | | 2.0 |
| 3.0 | 3.20 | | | | | | | | | | | | | | | | | | | | 3.0 |
| 3.5 | 3.20 | | | | | | | | | | | | | | | | | | | | 3.5 |
| 4.0 | 3.20 | | | | | | | | | | | | | | | | | | | | 4.0 |
| 4.5 | 3.20 | | | | | | | | | | | | | | | | | | | | 4.5 |
| 5.0 | 3.20 | | | | | | | | | | | | | | | | | | | | 5.0 |
| 5.5 | 3.20 | | | | | | | | | | | | | | | | | | | | 5.5 |
| 6.0 | 3.20 | | | | 3.20 | | | | 3.00 | | | | | | | | | | | | 6.0 |
| 6.5 | 3.20 | | | | 3.20 | | | | 3.00 | | | | 3.00 | | | | 2.90 | | | | 6.5 |
| 7.0 | 3.20 | | | | 3.20 | | | | 3.00 | | | | 3.00 | | | | 2.90 | | | | 7.0 |
| 8.0 | 3.05 | 2.35 | | | 3.20 | | | | 3.00 | | | | 3.00 | | | | 2.90 | | | | 8.0 |
| 9.0 | 2.75 | 2.20 | | | 3.20 | | | | 3.00 | | | | 3.00 | | | | 2.90 | | | | 9.0 |
| 10.0 | 2.55 | 2.05 | | | 3.20 | | | | 3.00 | | | | 3.00 | | | | 2.90 | | | | 10.0 |
| 11.0 | 2.35 | 1.90 | | | 3.20 | | | | 3.00 | | | | 3.00 | | | | 2.90 | | | | 11.0 |
| 12.0 | 2.15 | 1.80 | 1.55 | | 3.20 | 2.20 | | | 3.00 | 2.20 | | | 3.00 | 2.25 | | | 2.90 | 2.20 | | | 12.0 |
| 13.0 | 2.00 | 1.70 | 1.50 | 0.90 | 3.10 | 2.15 | | | 3.00 | 2.15 | | | 3.00 | 2.15 | | | 2.90 | 2.15 | | | 13.0 |
| 14.0 | 1.85 | 1.65 | 1.45 | 0.90 | 2.95 | 2.10 | | | 2.95 | 2.10 | | | 3.00 | 2.10 | | | 2.90 | 2.10 | | | 14.0 |
| 16.0 | 1.65 | 1.50 | 1.35 | 0.85 | 2.70 | 1.95 | 1.50 | | 2.70 | 1.95 | 1.50 | | 2.80 | 2.00 | 1.50 | | 2.80 | 2.00 | 1.50 | | 16.0 |
| 18.0 | 1.50 | 1.40 | 1.30 | | 2.35 | 1.85 | 1.40 | 0.85 | 2.50 | 1.85 | 1.40 | 0.85 | 2.30 | 1.90 | 1.45 | 0.85 | 2.60 | 1.90 | 1.45 | 0.85 | 18.0 |
| 20.0 | 1.35 | 1.30 | | | 1.75 | 1.75 | 1.35 | 0.85 | 2.35 | 1.75 | 1.35 | 0.80 | 1.70 | 1.80 | 1.35 | 0.85 | 2.00 | 1.80 | 1.35 | 0.85 | 20.0 |
| 22.0 | | | | | 1.25 | 1.65 | 1.25 | 0.80 | 1.90 | 1.65 | 1.25 | 0.80 | 1.20 | 1.70 | 1.30 | 0.80 | 1.50 | 1.70 | 1.30 | 0.80 | 22.0 |
| 24.0 | | | | | 0.85 | 1.30 | 1.20 | 0.80 | 1.45 | 1.60 | 1.20 | 0.80 | 0.80 | 1.30 | 1.20 | 0.80 | 1.10 | 1.55 | 1.20 | 0.80 | 24.0 |
| 26.0 | | | | | 0.45 | 0.90 | 1.15 | 0.80 | 1.10 | 1.40 | 1.15 | 0.80 | 0.45 | 0.90 | 1.15 | 0.80 | 0.75 | 1.15 | 1.15 | 0.80 | 26.0 |
| 28.0 | | | | | | 0.55 | 0.80 | 0.80 | 0.75 | 1.05 | 1.10 | 0.80 | | 0.55 | 0.80 | 0.75 | 0.45 | 0.80 | 1.05 | 0.75 | 28.0 |
| 30.0 | | | | | | | 0.45 | | 0.50 | 0.75 | 0.95 | | | | 0.45 | 0.55 | | 0.50 | 0.70 | 0.75 | 30.0 |
| 32.0 | | | | | | | | | | 0.50 | 0.65 | | | | | | | | 0.40 | | 32.0 |
| 34.0 | | | | | | | | | | | | | | | | | | | | | 34.0 |
| 36.0 | | | | | | | | | | | | | | | | | | | | | 36.0 |
| 38.0 | | | | | | | | | | | | | | | | | | | | | 38.0 |
| 40.0 | | | | | | | | | | | | | | | | | | | | | 40.0 |
| 42.0 | | | | | | | | | | | | | | | | | | | | | 42.0 |
| 1 | 0 | 0 | 0 | 0 | 100 | 100 | 100 | 100 | 0 | 0 | 0 | 0 | 100 | 100 | 100 | 100 | 50 | 50 | 50 | 50 | 1 |
| 2 | 0 | 0 | 0 | 0 | 68 | 68 | 68 | 68 | 100 | 100 | 100 | 100 | 83 | 83 | 83 | 83 | 100 | 100 | 100 | 100 | 2 |
| 3 | 0 | 0 | 0 | 0 | 68 | 68 | 68 | 68 | 100 | 100 | 100 | 100 | 83 | 83 | 83 | 83 | 100 | 100 | 100 | 100 | 3 |
| 4 | 0 | 0 | 0 | 0 | 68 | 68 | 68 | 68 | 100 | 100 | 100 | 100 | 83 | 83 | 83 | 83 | 100 | 100 | 100 | 100 | 4 |
| MODE | 1,2 | | | | 1 | | | | 2 | | | | 1 | | | | 2 | | | | MODE |
| [DEG] | 23 - 83.5 | 35 - 83.5 | 54 - 83.5 | 67 - 83.5 | 57 - 83.5 | 60 - 83.5 | 60 - 83.5 | 64 - 83.5 | 52 - 83.5 | 54 - 83.5 | 57 - 83.5 | 65 - 83.5 | 61 - 83.5 | 63 - 83.5 | 64 - 83.5 | 64 - 83.5 | 58 - 83.5 | 61 - 83.5 | 61 - 83.5 | 64 - 83.5 | [DEG] |

| m | 40.0 | 40.0 | 40.0 | 40.0 | 40.0 | 40.0 | 40.0 | 40.0 | 41.2 | 41.2 | 41.2 | 41.2 | | | | | | | | | m |
|---|---|---|---|---|---|---|---|---|---|---|---|---|---|---|---|---|---|---|---|---|---|
| ° | 5 | 25 | 45 | 60 | 5 | 25 | 45 | 60 | 5 | 25 | 45 | 60 | | | | | | | | | ° |
| 2.0 | | | | | | | | | | | | | | | | | | | | | 2.0 |
| 3.0 | | | | | | | | | | | | | | | | | | | | | 3.0 |
| 3.5 | | | | | | | | | | | | | | | | | | | | | 3.5 |
| 4.0 | | | | | | | | | | | | | | | | | | | | | 4.0 |
| 4.5 | | | | | | | | | | | | | | | | | | | | | 4.5 |
| 5.0 | | | | | | | | | | | | | | | | | | | | | 5.0 |
| 5.5 | | | | | | | | | | | | | | | | | | | | | 5.5 |
| 6.0 | | | | | | | | | | | | | | | | | | | | | 6.0 |
| 6.5 | | | | | | | | | | | | | | | | | | | | | 6.5 |
| 7.0 | 3.00 | | | | 2.80 | | | | 2.50 | | | | | | | | | | | | 7.0 |
| 8.0 | 3.00 | | | | 2.80 | | | | 2.50 | | | | | | | | | | | | 8.0 |
| 9.0 | 3.00 | | | | 2.80 | | | | 2.50 | | | | | | | | | | | | 9.0 |
| 10.0 | 3.00 | | | | 2.80 | | | | 2.50 | | | | | | | | | | | | 10.0 |
| 11.0 | 3.00 | | | | 2.80 | | | | 2.50 | | | | | | | | | | | | 11.0 |
| 12.0 | 3.00 | | | | 2.80 | | | | 2.50 | | | | | | | | | | | | 12.0 |
| 13.0 | 3.00 | 2.15 | | | 2.80 | 2.15 | | | 2.50 | 2.15 | | | | | | | | | | | 13.0 |
| 14.0 | 3.00 | 2.10 | | | 2.80 | 2.10 | | | 2.50 | 2.10 | | | | | | | | | | | 14.0 |
| 16.0 | 2.85 | 2.00 | | | 2.80 | 2.00 | | | 2.50 | 2.00 | | | | | | | | | | | 16.0 |
| 18.0 | 2.25 | 1.90 | 1.45 | 0.85 | 2.35 | 1.90 | 1.45 | 0.85 | 2.25 | 1.90 | 1.45 | 0.85 | | | | | | | | | 18.0 |
| 20.0 | 1.65 | 1.80 | 1.40 | 0.85 | 1.75 | 1.80 | 1.40 | 0.85 | 1.65 | 1.80 | 1.40 | 0.85 | | | | | | | | | 20.0 |
| 22.0 | 1.15 | 1.75 | 1.30 | 0.80 | 1.25 | 1.75 | 1.30 | 0.80 | 1.15 | 1.75 | 1.30 | 0.80 | | | | | | | | | 22.0 |
| 24.0 | 0.75 | 1.25 | 1.25 | 0.80 | 0.85 | 1.35 | 1.25 | 0.80 | 0.75 | 1.25 | 1.25 | 0.80 | | | | | | | | | 24.0 |
| 26.0 | 0.40 | 0.85 | 1.20 | 0.80 | 0.50 | 0.95 | 1.20 | 0.75 | 0.40 | 0.85 | 1.20 | 0.75 | | | | | | | | | 26.0 |
| 28.0 | | 0.50 | 0.80 | 0.75 | | 0.60 | 0.90 | 0.75 | | 0.50 | 0.80 | 0.75 | | | | | | | | | 28.0 |
| 30.0 | | | 0.45 | 0.55 | | | 0.55 | 0.65 | | | 0.45 | 0.55 | | | | | | | | | 30.0 |
| 32.0 | | | | | | | | | | | | | | | | | | | | | 32.0 |
| 34.0 | | | | | | | | | | | | | | | | | | | | | 34.0 |
| 36.0 | | | | | | | | | | | | | | | | | | | | | 36.0 |
| 38.0 | | | | | | | | | | | | | | | | | | | | | 38.0 |
| 40.0 | | | | | | | | | | | | | | | | | | | | | 40.0 |
| 42.0 | | | | | | | | | | | | | | | | | | | | | 42.0 |
| 1 | 100 | 100 | 100 | 100 | 84 | 84 | 84 | 84 | 100 | 100 | 100 | 100 | | | | | | | | | 1 |
| 2 | 95 | 95 | 95 | 95 | 100 | 100 | 100 | 100 | 100 | 100 | 100 | 100 | | | | | | | | | 2 |
| 3 | 95 | 95 | 95 | 95 | 100 | 100 | 100 | 100 | 100 | 100 | 100 | 100 | | | | | | | | | 3 |
| 4 | 95 | 95 | 95 | 95 | 100 | 100 | 100 | 100 | 100 | 100 | 100 | 100 | | | | | | | | | 4 |
| MODE | 1 | | | | 2 | | | | 1,2 | | | | | | | | | | | | MODE |
| [DEG] | 63 - 83.5 | 65 - 83.5 | 65 - 83.5 | 67 - 83.5 | 63 - 83.5 | 65 - 83.5 | 66 - 83.5 | 67 - 83.5 | 64 - 83.5 | 66 - 83.5 | 67 - 83.5 | 68 - 83.5 | | | | | | | | | [DEG] |

| FAJ | 8.5 m | | 4.28 m | 360 ° | JPN |
|---|---|---|---|---|---|

| m | 10.3 | 10.3 | 10.3 | 10.3 | 33.6 | 33.6 | 33.6 | 33.6 | 33.6 | 33.6 | 33.6 | 33.6 | 37.3 | 37.3 | 37.3 | 37.3 | 37.3 | 37.3 | 37.3 | 37.3 | m |
|---|---|---|---|---|---|---|---|---|---|---|---|---|---|---|---|---|---|---|---|---|---|
| ° | 5 | 25 | 45 | 60 | 5 | 25 | 45 | 60 | 5 | 25 | 45 | 60 | 5 | 25 | 45 | 60 | 5 | 25 | 45 | 60 | ° |
| m 2.0 | 4.20 | | | | | | | | | | | | | | | | | | | | 2.0 |
| 3.0 | 4.20 | | | | | | | | | | | | | | | | | | | | 3.0 |
| 3.5 | 4.20 | | | | | | | | | | | | | | | | | | | | 3.5 |
| 4.0 | 4.20 | | | | | | | | | | | | | | | | | | | | 4.0 |
| 4.5 | 4.20 | 4.20 | | | 4.20 | | | | | | | | | | | | | | | | 4.5 |
| 5.0 | 4.20 | 4.20 | | | 4.20 | | | | 4.20 | | | | | | | | | | | | 5.0 |
| 5.5 | 4.20 | 4.20 | | | 4.20 | | | | 4.20 | | | | 4.20 | | | | 4.20 | | | | 5.5 |
| 6.0 | 4.20 | 4.20 | | | 4.20 | | | | 4.20 | | | | 4.20 | | | | 4.20 | | | | 6.0 |
| 6.5 | 4.20 | 4.20 | 3.00 | | 4.20 | | | | 4.20 | | | | 4.20 | | | | 4.20 | | | | 6.5 |
| 7.0 | 4.20 | 4.20 | 2.90 | | 4.20 | | | | 4.20 | | | | 4.20 | | | | 4.20 | | | | 7.0 |
| 8.0 | 4.20 | 3.95 | 2.75 | 1.70 | 4.20 | 4.20 | | | 4.20 | 4.20 | | | 4.20 | | | | 4.20 | | | | 8.0 |
| 9.0 | 4.20 | 3.75 | 2.60 | 1.65 | 4.20 | 4.20 | | | 4.20 | 4.20 | | | 4.20 | 4.20 | | | 4.20 | 4.20 | | | 9.0 |
| 10.0 | 4.20 | 3.50 | 2.50 | 1.60 | 4.20 | 4.20 | 2.85 | | 4.20 | 4.20 | | | 4.20 | 4.20 | | | 4.20 | 4.20 | | | 10.0 |
| 11.0 | 3.95 | 3.30 | 2.45 | 1.60 | 4.05 | 4.20 | 2.75 | 1.65 | 4.20 | 4.10 | 2.75 | 1.65 | 3.95 | 4.20 | 2.80 | | 4.20 | 4.20 | 2.75 | | 11.0 |
| 12.0 | 3.70 | 3.15 | 2.35 | | 3.35 | 4.00 | 2.70 | 1.65 | 4.15 | 3.85 | 2.70 | 1.65 | 3.25 | 4.05 | 2.70 | 1.65 | 3.65 | 4.00 | 2.70 | 1.65 | 12.0 |
| 13.0 | 3.45 | 3.00 | 2.35 | | 2.75 | 3.45 | 2.65 | 1.60 | 3.55 | 3.65 | 2.65 | 1.60 | 2.70 | 3.40 | 2.65 | 1.60 | 3.10 | 3.70 | 2.65 | 1.60 | 13.0 |
| 14.0 | 3.25 | 2.90 | | | 2.30 | 2.90 | 2.60 | 1.60 | 3.05 | 3.45 | 2.60 | 1.60 | 2.25 | 2.85 | 2.60 | 1.60 | 2.60 | 3.20 | 2.60 | 1.60 | 14.0 |
| 16.0 | | | | | 1.50 | 2.00 | 2.45 | 1.55 | 2.25 | 2.65 | 2.45 | 1.55 | 1.45 | 2.00 | 2.40 | 1.55 | 1.80 | 2.30 | 2.50 | 1.55 | 16.0 |
| 18.0 | | | | | 0.85 | 1.30 | 1.65 | 1.55 | 1.60 | 1.95 | 2.25 | 1.55 | 0.85 | 1.30 | 1.65 | 1.55 | 1.20 | 1.60 | 1.95 | 1.55 | 18.0 |
| 20.0 | | | | | | 0.75 | 1.05 | 1.15 | 1.10 | 1.40 | 1.65 | 1.50 | | 0.75 | 1.05 | 1.15 | 0.70 | 1.05 | 1.35 | 1.45 | 20.0 |
| 22.0 | | | | | | | 0.50 | 0.60 | 0.65 | 0.95 | 1.15 | 1.20 | | | 0.55 | 0.65 | | 0.60 | 0.85 | 0.90 | 22.0 |
| 24.0 | | | | | | | | | | 0.55 | 0.70 | | | | | | | | 0.40 | 0.45 | 24.0 |
| 26.0 | | | | | | | | | | | | | | | | | | | | | 26.0 |
| 28.0 | | | | | | | | | | | | | | | | | | | | | 28.0 |
| 30.0 | | | | | | | | | | | | | | | | | | | | | 30.0 |
| 32.0 | | | | | | | | | | | | | | | | | | | | | 32.0 |
| 34.0 | | | | | | | | | | | | | | | | | | | | | 34.0 |
| 36.0 | | | | | | | | | | | | | | | | | | | | | 36.0 |
| 38.0 | | | | | | | | | | | | | | | | | | | | | 38.0 |
| 40.0 | | | | | | | | | | | | | | | | | | | | | 40.0 |
| 42.0 | | | | | | | | | | | | | | | | | | | | | 42.0 |
| % 1 | 0 | 0 | 0 | 0 | 100 | 100 | 100 | 100 | 0 | 0 | 0 | 0 | 100 | 100 | 100 | 100 | 50 | 50 | 50 | 50 | 1 |
| % 2 | 0 | 0 | 0 | 0 | 68 | 68 | 68 | 68 | 100 | 100 | 100 | 100 | 83 | 83 | 83 | 83 | 100 | 100 | 100 | 100 | 2 |
| % 3 | 0 | 0 | 0 | 0 | 68 | 68 | 68 | 68 | 100 | 100 | 100 | 100 | 83 | 83 | 83 | 83 | 100 | 100 | 100 | 100 | 3 |
| % 4 | 0 | 0 | 0 | 0 | 68 | 68 | 68 | 68 | 100 | 100 | 100 | 100 | 83 | 83 | 83 | 83 | 100 | 100 | 100 | 100 | 4 |
| MODE | 1,2 | | | | 1 | | | | 2 | | | | 1 | | | | 2 | | | | MODE |
| [DEG] | 30 - 83.5 | 38 - 83.5 | 49 - 83.5 | 63 - 83.5 | 65 - 83.5 | 64 - 83.5 | 63 - 83.5 | 64 - 83.5 | 58 - 83.5 | 58 - 83.5 | 60 - 83.5 | 65 - 83.5 | 67 - 83.5 | 67 - 83.5 | 66 - 83.5 | 67 - 83.5 | 64 - 83.5 | 64 - 83.5 | 64 - 83.5 | 64 - 83.5 | [DEG] |

| m | 40.0 | 40.0 | 40.0 | 40.0 | 40.0 | 40.0 | 40.0 | 40.0 | 41.2 | 41.2 | 41.2 | 41.2 | | | | | | | | | m |
|---|---|---|---|---|---|---|---|---|---|---|---|---|---|---|---|---|---|---|---|---|---|
| ° | 5 | 25 | 45 | 60 | 5 | 25 | 45 | 60 | 5 | 25 | 45 | 60 | | | | | | | | | ° |
| m 2.0 | | | | | | | | | | | | | | | | | | | | | 2.0 |
| 3.0 | | | | | | | | | | | | | | | | | | | | | 3.0 |
| 3.5 | | | | | | | | | | | | | | | | | | | | | 3.5 |
| 4.0 | | | | | | | | | | | | | | | | | | | | | 4.0 |
| 4.5 | | | | | | | | | | | | | | | | | | | | | 4.5 |
| 5.0 | | | | | | | | | | | | | | | | | | | | | 5.0 |
| 5.5 | | | | | | | | | | | | | | | | | | | | | 5.5 |
| 6.0 | 4.00 | | | | 4.00 | | | | 3.80 | | | | | | | | | | | | 6.0 |
| 6.5 | 4.00 | | | | 4.00 | | | | 3.80 | | | | | | | | | | | | 6.5 |
| 7.0 | 4.00 | | | | 4.00 | | | | 3.80 | | | | | | | | | | | | 7.0 |
| 8.0 | 4.00 | | | | 4.00 | | | | 3.80 | | | | | | | | | | | | 8.0 |
| 9.0 | 4.00 | | | | 4.00 | | | | 3.80 | | | | | | | | | | | | 9.0 |
| 10.0 | 4.00 | 4.00 | | | 4.00 | 4.00 | | | 3.80 | 3.80 | | | | | | | | | | | 10.0 |
| 11.0 | 3.85 | 4.00 | | | 3.95 | 4.00 | | | 3.80 | 3.80 | | | | | | | | | | | 11.0 |
| 12.0 | 3.20 | 3.95 | 2.70 | 1.65 | 3.30 | 4.00 | 2.70 | 1.65 | 3.20 | 3.80 | 2.75 | | | | | | | | | | 12.0 |
| 13.0 | 2.65 | 3.35 | 2.65 | 1.60 | 2.75 | 3.45 | 2.65 | 1.60 | 2.65 | 3.35 | 2.65 | 1.60 | | | | | | | | | 13.0 |
| 14.0 | 2.20 | 2.85 | 2.60 | 1.60 | 2.30 | 2.90 | 2.60 | 1.60 | 2.20 | 2.80 | 2.60 | 1.60 | | | | | | | | | 14.0 |
| 16.0 | 1.40 | 1.95 | 2.40 | 1.55 | 1.55 | 2.05 | 2.45 | 1.55 | 1.40 | 1.95 | 2.40 | 1.55 | | | | | | | | | 16.0 |
| 18.0 | 0.80 | 1.30 | 1.65 | 1.55 | 0.90 | 1.35 | 1.75 | 1.55 | 0.80 | 1.25 | 1.65 | 1.55 | | | | | | | | | 18.0 |
| 20.0 | | 0.75 | 1.05 | 1.20 | 0.45 | 0.85 | 1.15 | 1.25 | | 0.75 | 1.05 | 1.20 | | | | | | | | | 20.0 |
| 22.0 | | | 0.55 | 0.65 | | | 0.65 | 0.75 | | | 0.55 | 0.65 | | | | | | | | | 22.0 |
| 24.0 | | | | | | | | | | | | | | | | | | | | | 24.0 |
| 26.0 | | | | | | | | | | | | | | | | | | | | | 26.0 |
| 28.0 | | | | | | | | | | | | | | | | | | | | | 28.0 |
| 30.0 | | | | | | | | | | | | | | | | | | | | | 30.0 |
| 32.0 | | | | | | | | | | | | | | | | | | | | | 32.0 |
| 34.0 | | | | | | | | | | | | | | | | | | | | | 34.0 |
| 36.0 | | | | | | | | | | | | | | | | | | | | | 36.0 |
| 38.0 | | | | | | | | | | | | | | | | | | | | | 38.0 |
| 40.0 | | | | | | | | | | | | | | | | | | | | | 40.0 |
| 42.0 | | | | | | | | | | | | | | | | | | | | | 42.0 |
| % 1 | 100 | 100 | 100 | 100 | 84 | 84 | 84 | 84 | 100 | 100 | 100 | 100 | | | | | | | | | 1 |
| % 2 | 95 | 95 | 95 | 95 | 100 | 100 | 100 | 100 | 100 | 100 | 100 | 100 | | | | | | | | | 2 |
| % 3 | 95 | 95 | 95 | 95 | 100 | 100 | 100 | 100 | 100 | 100 | 100 | 100 | | | | | | | | | 3 |
| % 4 | 95 | 95 | 95 | 95 | 100 | 100 | 100 | 100 | 100 | 100 | 100 | 100 | | | | | | | | | 4 |
| MODE | 1 | | | | 2 | | | | 1,2 | | | | | | | | | | | | MODE |
| [DEG] | 69 - 83.5 | 69 - 83.5 | 68 - 83.5 | 69 - 83.5 | 65 - 83.5 | 69 - 83.5 | 68 - 83.5 | 69 - 83.5 | 69 - 83.5 | 69 - 83.5 | 69 - 83.5 | 70 - 83.5 | | | | | | | | | [DEG] |

| FAJ | 13.7 m | | 4.28 m | 360 ° | JPN |
|---|---|---|---|---|---|

| m | 10.3 | 10.3 | 10.3 | 10.3 | 33.6 | 33.6 | 33.6 | 33.6 | 33.6 | 33.6 | 33.6 | 33.6 | 37.3 | 37.3 | 37.3 | 37.3 | 37.3 | 37.3 | 37.3 | 37.3 | m |
|---|---|---|---|---|---|---|---|---|---|---|---|---|---|---|---|---|---|---|---|---|---|
| ° | 5 | 25 | 45 | 60 | 5 | 25 | 45 | 60 | 5 | 25 | 45 | 60 | 5 | 25 | 45 | 60 | 5 | 25 | 45 | 60 | ° |
| 2.0 | | | | | | | | | | | | | | | | | | | | | 2.0 |
| 3.0 | 3.20 | | | | | | | | | | | | | | | | | | | | 3.0 |
| 3.5 | 3.20 | | | | | | | | | | | | | | | | | | | | 3.5 |
| 4.0 | 3.20 | | | | | | | | | | | | | | | | | | | | 4.0 |
| 4.5 | 3.20 | | | | | | | | | | | | | | | | | | | | 4.5 |
| 5.0 | 3.20 | | | | | | | | | | | | | | | | | | | | 5.0 |
| 5.5 | 3.20 | | | | | | | | | | | | | | | | | | | | 5.5 |
| 6.0 | 3.20 | | | | 3.20 | | | | 3.00 | | | | | | | | | | | | 6.0 |
| 6.5 | 3.20 | | | | 3.20 | | | | 3.00 | | | | 3.00 | | | | 2.90 | | | | 6.5 |
| 7.0 | 3.20 | | | | 3.20 | | | | 3.00 | | | | 3.00 | | | | 2.90 | | | | 7.0 |
| 8.0 | 3.05 | 2.35 | | | 3.20 | | | | 3.00 | | | | 3.00 | | | | 2.90 | | | | 8.0 |
| 9.0 | 2.75 | 2.20 | | | 3.20 | | | | 3.00 | | | | 3.00 | | | | 2.90 | | | | 9.0 |
| 10.0 | 2.55 | 2.05 | | | 3.20 | | | | 3.00 | | | | 3.00 | | | | 2.90 | | | | 10.0 |
| 11.0 | 2.35 | 1.90 | | | 3.20 | | | | 3.00 | | | | 3.00 | | | | 2.90 | | | | 11.0 |
| 12.0 | 2.15 | 1.80 | 1.55 | | 3.20 | 2.20 | | | 3.00 | 2.20 | | | 3.00 | 2.25 | | | 2.90 | 2.20 | | | 12.0 |
| 13.0 | 2.00 | 1.70 | 1.50 | 0.90 | 3.10 | 2.15 | | | 3.00 | 2.15 | | | 3.00 | 2.15 | | | 2.90 | 2.15 | | | 13.0 |
| 14.0 | 1.85 | 1.65 | 1.45 | 0.90 | 2.75 | 2.10 | | | 2.95 | 2.10 | | | 2.70 | 2.10 | | | 2.90 | 2.10 | | | 14.0 |
| 16.0 | 1.65 | 1.50 | 1.35 | 0.85 | 1.95 | 1.95 | 1.50 | | 2.60 | 1.95 | 1.50 | | 1.90 | 2.00 | 1.50 | | 2.20 | 2.00 | 1.50 | | 16.0 |
| 18.0 | 1.50 | 1.40 | 1.30 | | 1.35 | 1.85 | 1.40 | 0.85 | 2.00 | 1.85 | 1.40 | 0.85 | 1.30 | 1.90 | 1.45 | 0.85 | 1.60 | 1.90 | 1.45 | 0.85 | 18.0 |
| 20.0 | 1.35 | 1.30 | | | 0.85 | 1.45 | 1.35 | 0.85 | 1.45 | 1.75 | 1.35 | 0.80 | 0.80 | 1.40 | 1.35 | 0.85 | 1.10 | 1.65 | 1.35 | 0.85 | 20.0 |
| 22.0 | | | | | 0.40 | 0.95 | 1.25 | 0.80 | 1.05 | 1.50 | 1.25 | 0.80 | | 0.95 | 1.30 | 0.80 | 0.70 | 1.20 | 1.30 | 0.80 | 22.0 |
| 24.0 | | | | | | 0.55 | 0.95 | 0.80 | 0.70 | 1.10 | 1.20 | 0.80 | | 0.55 | 0.90 | 0.80 | | 0.80 | 1.15 | 0.80 | 24.0 |
| 26.0 | | | | | | | 0.50 | 0.65 | 0.40 | 0.75 | 1.00 | 0.80 | | | 0.50 | 0.65 | | 0.45 | 0.75 | 0.80 | 26.0 |
| 28.0 | | | | | | | | | | 0.45 | 0.65 | 0.75 | | | | | | | 0.40 | 0.50 | 28.0 |
| 30.0 | | | | | | | | | | | | | | | | | | | | | 30.0 |
| 32.0 | | | | | | | | | | | | | | | | | | | | | 32.0 |
| 34.0 | | | | | | | | | | | | | | | | | | | | | 34.0 |
| 36.0 | | | | | | | | | | | | | | | | | | | | | 36.0 |
| 38.0 | | | | | | | | | | | | | | | | | | | | | 38.0 |
| 40.0 | | | | | | | | | | | | | | | | | | | | | 40.0 |
| 42.0 | | | | | | | | | | | | | | | | | | | | | 42.0 |
| % 1 | 0 | 0 | 0 | 0 | 100 | 100 | 100 | 100 | 0 | 0 | 0 | 0 | 100 | 100 | 100 | 100 | 50 | 50 | 50 | 50 | 1 |
| % 2 | 0 | 0 | 0 | 0 | 68 | 68 | 68 | 68 | 100 | 100 | 100 | 100 | 83 | 83 | 83 | 83 | 100 | 100 | 100 | 100 | 2 |
| % 3 | 0 | 0 | 0 | 0 | 68 | 68 | 68 | 68 | 100 | 100 | 100 | 100 | 83 | 83 | 83 | 83 | 100 | 100 | 100 | 100 | 3 |
| % 4 | 0 | 0 | 0 | 0 | 68 | 68 | 68 | 68 | 100 | 100 | 100 | 100 | 83 | 83 | 83 | 83 | 100 | 100 | 100 | 100 | 4 |
| MODE | 1,2 | | | | 1 | | | | 2 | | | | 1 | | | | 2 | | | | MODE |
| [DEG] | 23 - 83.5 | 35 - 83.5 | 54 - 83.5 | 67 - 83.5 | 63 - 83.5 | 66 - 83.5 | 66 - 83.5 | 67 - 83.5 | 58 - 83.5 | 60 - 83.5 | 64 - 83.5 | 65 - 83.5 | 68 - 83.5 | 68 - 83.5 | 69 - 83.5 | 70 - 83.5 | 66 - 83.5 | 66 - 83.5 | 67 - 83.5 | 67 - 83.5 | [DEG] |

| m | 40.0 | 40.0 | 40.0 | 40.0 | 40.0 | 40.0 | 40.0 | 40.0 | 41.2 | 41.2 | 41.2 | 41.2 | | | | | | | | | m |
|---|---|---|---|---|---|---|---|---|---|---|---|---|---|---|---|---|---|---|---|---|---|
| ° | 5 | 25 | 45 | 60 | 5 | 25 | 45 | 60 | 5 | 25 | 45 | 60 | | | | | | | | | ° |
| 2.0 | | | | | | | | | | | | | | | | | | | | | 2.0 |
| 3.0 | | | | | | | | | | | | | | | | | | | | | 3.0 |
| 3.5 | | | | | | | | | | | | | | | | | | | | | 3.5 |
| 4.0 | | | | | | | | | | | | | | | | | | | | | 4.0 |
| 4.5 | | | | | | | | | | | | | | | | | | | | | 4.5 |
| 5.0 | | | | | | | | | | | | | | | | | | | | | 5.0 |
| 5.5 | | | | | | | | | | | | | | | | | | | | | 5.5 |
| 6.0 | | | | | | | | | | | | | | | | | | | | | 6.0 |
| 6.5 | | | | | | | | | | | | | | | | | | | | | 6.5 |
| 7.0 | 3.00 | | | | 2.80 | | | | 2.50 | | | | | | | | | | | | 7.0 |
| 8.0 | 3.00 | | | | 2.80 | | | | 2.50 | | | | | | | | | | | | 8.0 |
| 9.0 | 3.00 | | | | 2.80 | | | | 2.50 | | | | | | | | | | | | 9.0 |
| 10.0 | 3.00 | | | | 2.80 | | | | 2.50 | | | | | | | | | | | | 10.0 |
| 11.0 | 3.00 | | | | 2.80 | | | | 2.50 | | | | | | | | | | | | 11.0 |
| 12.0 | 3.00 | | | | 2.80 | | | | 2.50 | | | | | | | | | | | | 12.0 |
| 13.0 | 3.00 | 2.15 | | | 2.80 | 2.15 | | | 2.50 | 2.15 | | | | | | | | | | | 13.0 |
| 14.0 | 2.60 | 2.10 | | | 2.70 | 2.10 | | | 2.50 | 2.10 | | | | | | | | | | | 14.0 |
| 16.0 | 1.85 | 2.00 | | | 1.95 | 2.00 | | | 1.85 | 2.00 | | | | | | | | | | | 16.0 |
| 18.0 | 1.25 | 1.90 | 1.45 | 0.85 | 1.35 | 1.90 | 1.45 | 0.85 | 1.25 | 1.90 | 1.45 | 0.85 | | | | | | | | | 18.0 |
| 20.0 | 0.75 | 1.40 | 1.40 | 0.85 | 0.85 | 1.45 | 1.40 | 0.85 | 0.75 | 1.40 | 1.40 | 0.85 | | | | | | | | | 20.0 |
| 22.0 | | 0.90 | 1.30 | 0.80 | 0.45 | 1.00 | 1.30 | 0.80 | | 0.90 | 1.30 | 0.80 | | | | | | | | | 22.0 |
| 24.0 | | 0.50 | 0.90 | 0.80 | | 0.60 | 1.00 | 0.80 | | 0.50 | 0.90 | 0.80 | | | | | | | | | 24.0 |
| 26.0 | | | 0.50 | 0.65 | | | 0.60 | 0.75 | | | 0.50 | 0.65 | | | | | | | | | 26.0 |
| 28.0 | | | | | | | | | | | | | | | | | | | | | 28.0 |
| 30.0 | | | | | | | | | | | | | | | | | | | | | 30.0 |
| 32.0 | | | | | | | | | | | | | | | | | | | | | 32.0 |
| 34.0 | | | | | | | | | | | | | | | | | | | | | 34.0 |
| 36.0 | | | | | | | | | | | | | | | | | | | | | 36.0 |
| 38.0 | | | | | | | | | | | | | | | | | | | | | 38.0 |
| 40.0 | | | | | | | | | | | | | | | | | | | | | 40.0 |
| 42.0 | | | | | | | | | | | | | | | | | | | | | 42.0 |
| % 1 | 100 | 100 | 100 | 100 | 84 | 84 | 84 | 84 | 100 | 100 | 100 | 100 | | | | | | | | | 1 |
| % 2 | 95 | 95 | 95 | 95 | 100 | 100 | 100 | 100 | 100 | 100 | 100 | 100 | | | | | | | | | 2 |
| % 3 | 95 | 95 | 95 | 95 | 100 | 100 | 100 | 100 | 100 | 100 | 100 | 100 | | | | | | | | | 3 |
| % 4 | 95 | 95 | 95 | 95 | 100 | 100 | 100 | 100 | 100 | 100 | 100 | 100 | | | | | | | | | 4 |
| MODE | 1 | | | | 2 | | | | 1,2 | | | | | | | | | | | | MODE |
| [DEG] | 69 - 83.5 | 70 - 83.5 | 70 - 83.5 | 72 - 83.5 | 68 - 83.5 | 70 - 83.5 | 71 - 83.5 | 72 - 83.5 | 71 - 83.5 | 70 - 83.5 | 71 - 83.5 | 73 - 83.5 | | | | | | | | | [DEG] |

## ■Precautions concerning rated lifting capacity table (when on-rubber)

1. The rated lifting capacities assume that the crane is set horizontally on firm ground, the tires are at the standard pressure (900 kPa {9.00 kgf/cm²}) and the suspension cylinders are fully retracted, and for boom lift, include the weight of the lifting devices and main winch hook block (35 t hook block: 310 kg).
   The values above the thick line are based on the structural strength while those below are based on the crane stability factor. When performing actual work, use after considering the ground and operating conditions, etc.
2. The load radius is based on the actual figure including boom and tire deflection, so always use the load radius as the standard.
3. The standard number of parts of line on the hook block for each boom length is listed in each rated lifting capacity table for on-rubber operation. However, when using other number of parts of line, the load per line must not exceed 5.0 t for main winch wire rope or 5.0 t for auxiliary winch wire rope.
4. Only perform crane operations in the front area while the AML "front position symbol" is lit. The front area is when the boom is within 2° of the front of the carrier.
5. When using the single top, the standard number of parts of line is 1. The rated lifting capacity for the single top is the value obtained by subtracting 210 kg from the boom rated lifting capacity, and includes the weight of the lifting devices and auxiliary winch hook block (100 kg), and must not exceed 5.0 t.
6. Do not perform high-speed hoist down, boom lift operation with a boom longer than 17.8 m, or use of a jib.
7. Perform pick and carry with the "drive mode selector" switch set to "Lo differential lock" and the shift switch set to first gear.
8. Perform pick and carry with the slewing brake on, the load close to the ground so it will not swing, and at a speed of 1.6 km or lower. In particular, abrupt steering, starting or braking must be avoided.
9. Do not perform crane operations while performing pick and carry.

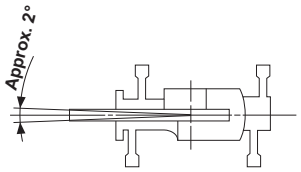


Explanation of symbols used in rated lifting capacity table

| | | | |
|---|---|---|---|
| MB | Indicates boom rated lifting capacity. | t JPN | Indicates rated lifting capacity unit. |
| On-rubber (stationary) | Indicates on-rubber stationary. | m | Indicates boom length. |
| On-rubber (creep) (1.6 km/h or less) | Indicates on-rubber creeping (1.6 km/h or less). | m | Indicates load radius. |
| 360 ° | Indicates slewing range in which lifting may be performed. | % | Indicates boom telescoping condition (telescoping ratio %). MODE indicates boom telescoping mode. |
| Front | For front, indicates front-only. | | Indicates boom elevation angle range in which operation is possible without load. |
| | | | Indicates standard number of parts of line. |
| | | | Indicates standard hook block. |

## ■Rated lifting capacity table for on-rubber operation

MB / On-rubber (stationary) / Front / JPN

| m | 10.3 | 14.1 | 14.1 | 17.8 | 17.8 | | | | | m |
|---|---|---|---|---|---|---|---|---|---|---|
| 3.0 | 6.80 | 6.60 | 7.30 | 6.40 | 7.60 | | | | | 3.0 |
| 3.5 | 5.90 | 5.70 | 6.40 | 5.50 | 6.70 | | | | | 3.5 |
| 4.0 | 5.10 | 4.90 | 5.70 | 4.80 | 6.00 | | | | | 4.0 |
| 4.5 | 4.40 | 4.20 | 5.00 | 4.10 | 5.30 | | | | | 4.5 |
| 5.0 | 3.90 | 3.70 | 4.50 | 3.50 | 4.80 | | | | | 5.0 |
| 5.5 | 3.40 | 3.10 | 4.00 | 3.00 | 4.30 | | | | | 5.5 |
| 6.0 | 2.90 | 2.70 | 3.50 | 2.50 | 3.80 | | | | | 6.0 |
| 6.5 | 2.50 | 2.30 | 3.10 | 2.10 | 3.40 | | | | | 6.5 |
| 7.0 | 2.10 | 1.90 | 2.70 | 1.80 | 3.10 | | | | | 7.0 |
| 8.0 | | 1.30 | 2.10 | 1.10 | 2.40 | | | | | 8.0 |
| 9.0 | | 0.75 | 1.60 | 0.60 | 1.90 | | | | | 9.0 |
| 10.0 | | | 1.20 | | 1.50 | | | | | 10.0 |
| 11.0 | | | 0.80 | | 1.10 | | | | | 11.0 |
| 12.0 | | | | | 0.80 | | | | | 12.0 |
| 1 | 0 | 50 | 0 | 100 | 0 | | | | | 1 |
| 2 | 0 | 0 | 16 | 0 | 33 | | | | | 2 |
| 3 | 0 | 0 | 16 | 0 | 33 | | | | | 3 |
| 4 | 0 | 0 | 16 | 0 | 33 | | | | | 4 |
| MODE | 1,2 | 1 | 2 | 1 | 2 | | | | | MODE |
| [DEG] | 0 - 83.5 | 32 - 83.5 | 5 - 83.5 | 50 - 83.5 | 23 - 83.5 | | | | | [DEG] |
| | 4 | 4 | 4 | 4 | 4 | | | | | |
| | 35 t | | | | | | | | | |

MB / On-rubber (stationary) / 360 ° / JPN

| m | 10.3 | 14.1 | 14.1 | 17.8 | 17.8 | | | | | m |
|---|---|---|---|---|---|---|---|---|---|---|
| 3.0 | 5.10 | 4.80 | 5.90 | | | | | | | 3.0 |
| 3.5 | 4.00 | 3.70 | 4.80 | 3.60 | 5.20 | | | | | 3.5 |
| 4.0 | 3.10 | 2.90 | 3.90 | 2.70 | 4.40 | | | | | 4.0 |
| 4.5 | 2.40 | 2.20 | 3.20 | 2.00 | 3.60 | | | | | 4.5 |
| 5.0 | 1.80 | 1.60 | 2.60 | 1.40 | 3.00 | | | | | 5.0 |
| 5.5 | 1.30 | 1.10 | 2.10 | 0.90 | 2.50 | | | | | 5.5 |
| 6.0 | 0.90 | 0.65 | 1.60 | | 2.10 | | | | | 6.0 |
| 6.5 | 0.50 | | 1.30 | | 1.70 | | | | | 6.5 |
| 7.0 | | | 0.95 | | 1.30 | | | | | 7.0 |
| 8.0 | | | | | 0.80 | | | | | 8.0 |
| 9.0 | | | | | | | | | | 9.0 |
| 10.0 | | | | | | | | | | 10.0 |
| 11.0 | | | | | | | | | | 11.0 |
| 12.0 | | | | | | | | | | 12.0 |
| 1 | 0 | 50 | 0 | 100 | 0 | | | | | 1 |
| 2 | 0 | 0 | 16 | 0 | 33 | | | | | 2 |
| 3 | 0 | 0 | 16 | 0 | 33 | | | | | 3 |
| 4 | 0 | 0 | 16 | 0 | 33 | | | | | 4 |
| MODE | 1,2 | 1 | 2 | 1 | 2 | | | | | MODE |
| [DEG] | 25 - 66 | 54 - 70 | 44 - 70 | 65 - 73 | 52 - 73 | | | | | [DEG] |
| | 4 | 4 | 4 | 4 | 4 | | | | | |
| | 35 t | | | | | | | | | |

MB / On-rubber (creep) (1.6 km/h or less) / Front / JPN

| m | 10.3 | 14.1 | 14.1 | 17.8 | 17.8 | | | | | m |
|---|---|---|---|---|---|---|---|---|---|---|
| 3.0 | 5.70 | 5.60 | 6.20 | 5.50 | 6.50 | | | | | 3.0 |
| 3.5 | 5.00 | 4.80 | 5.50 | 4.70 | 5.70 | | | | | 3.5 |
| 4.0 | 4.30 | 4.20 | 4.80 | 4.00 | 5.10 | | | | | 4.0 |
| 4.5 | 3.80 | 3.60 | 4.30 | 3.50 | 4.50 | | | | | 4.5 |
| 5.0 | 3.30 | 3.10 | 3.80 | 3.00 | 4.10 | | | | | 5.0 |
| 5.5 | 2.80 | 2.70 | 3.40 | 2.50 | 3.60 | | | | | 5.5 |
| 6.0 | 2.50 | 2.30 | 3.00 | 2.20 | 3.20 | | | | | 6.0 |
| 6.5 | 2.10 | 1.90 | 2.60 | 1.80 | 2.90 | | | | | 6.5 |
| 7.0 | 1.80 | 1.60 | 2.30 | 1.50 | 2.60 | | | | | 7.0 |
| 8.0 | | 1.10 | 1.80 | 0.95 | 2.10 | | | | | 8.0 |
| 9.0 | | 0.65 | 1.40 | 0.50 | 1.60 | | | | | 9.0 |
| 10.0 | | | 1.00 | | 1.30 | | | | | 10.0 |
| 11.0 | | | 0.70 | | 0.95 | | | | | 11.0 |
| 12.0 | | | | | 0.70 | | | | | 12.0 |
| 1 | 0 | 50 | 0 | 100 | 0 | | | | | 1 |
| 2 | 0 | 0 | 16 | 0 | 33 | | | | | 2 |
| 3 | 0 | 0 | 16 | 0 | 33 | | | | | 3 |
| 4 | 0 | 0 | 16 | 0 | 33 | | | | | 4 |
| MODE | 1,2 | 1 | 2 | 1 | 2 | | | | | MODE |
| [DEG] | 0 - 83.5 | 31 - 83.5 | 5 - 83.5 | 51 - 83.5 | 29 - 83.5 | | | | | [DEG] |
| | 4 | 4 | 4 | 4 | 4 | | | | | |
| | 35 t | | | | | | | | | |

MB / On-rubber (creep) (1.6 km/h or less) / 360 ° / JPN

| m | 10.3 | 14.1 | 14.1 | 17.8 | 17.8 | | | | | m |
|---|---|---|---|---|---|---|---|---|---|---|
| 3.0 | 4.30 | 4.10 | 5.00 | | | | | | | 3.0 |
| 3.5 | 3.40 | 3.20 | 4.10 | 3.00 | 4.40 | | | | | 3.5 |
| 4.0 | 2.70 | 2.40 | 3.30 | 2.30 | 3.70 | | | | | 4.0 |
| 4.5 | 2.00 | 1.80 | 2.70 | 1.70 | 3.10 | | | | | 4.5 |
| 5.0 | 1.50 | 1.30 | 2.20 | 1.20 | 2.60 | | | | | 5.0 |
| 5.5 | 1.10 | 0.90 | 1.80 | 0.75 | 2.10 | | | | | 5.5 |
| 6.0 | 0.75 | 0.55 | 1.40 | | 1.70 | | | | | 6.0 |
| 6.5 | | | 1.10 | | 1.40 | | | | | 6.5 |
| 7.0 | | | 0.80 | | 1.10 | | | | | 7.0 |
| 8.0 | | | | | 0.70 | | | | | 8.0 |
| 9.0 | | | | | | | | | | 9.0 |
| 10.0 | | | | | | | | | | 10.0 |
| 11.0 | | | | | | | | | | 11.0 |
| 12.0 | | | | | | | | | | 12.0 |
| 1 | 0 | 50 | 0 | 100 | 0 | | | | | 1 |
| 2 | 0 | 0 | 16 | 0 | 33 | | | | | 2 |
| 3 | 0 | 0 | 16 | 0 | 33 | | | | | 3 |
| 4 | 0 | 0 | 16 | 0 | 33 | | | | | 4 |
| MODE | 1,2 | 1 | 2 | 1 | 2 | | | | | MODE |
| [DEG] | 32 - 66 | 54 - 70 | 45 - 70 | 65 - 73 | 53 - 73 | | | | | [DEG] |
| | 4 | 4 | 4 | 4 | 4 | | | | | |
| | 35 t | | | | | | | | | |

■Working range chart

Scale: 1/400

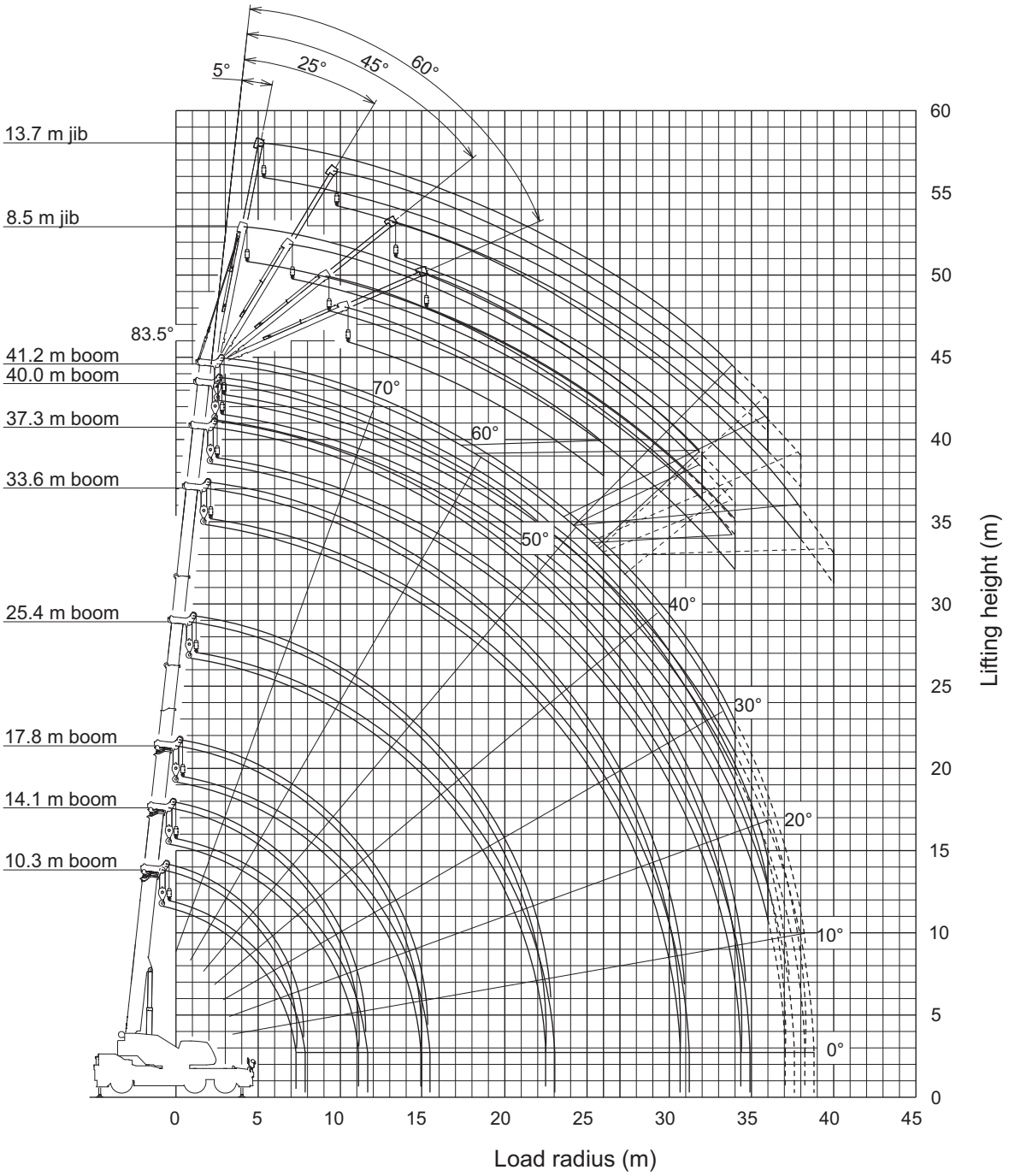


Note 1.The above drawing does not include boom and jib deflection.
2.The above drawing shows outrigger maximum (7.6 m) extension.
3.The dotted lines in the above drawing show Smart Chart capacity use.

## ■Working area diagram

Standard capacity

The size of the circles shown in the drawing of working areas corresponds to performances as determined by outrigger extension widths.

| | | Applicable capacity (boom lift) | Applicable capacity (jib lift) |
|---|---|---|---|
| Circle 1 | 7.6 m | ○ | ○ |
| Circle 2 | 7.2 m | ○ | ○ |
| Circle 3 | 6.5 m | ○ | ○ |
| Circle 4 | ( 6.0 m ) | ○ | ○ |
| Circle 5 | 5.28 m | ○ | ○ |
| Circle 6 | ( 4.8 m ) | ○ | ○ |
| Circle 7 | 4.28 m | ○ | ○ |
| Circle 8 | ( 3.5 m ) | ○ | |
| Circle 9 | 2.36 m | ○ | |

−Example−
When performing boom lift using the outrigger extension widths shown in the drawing, the capacity and range per each working area will be as listed below.

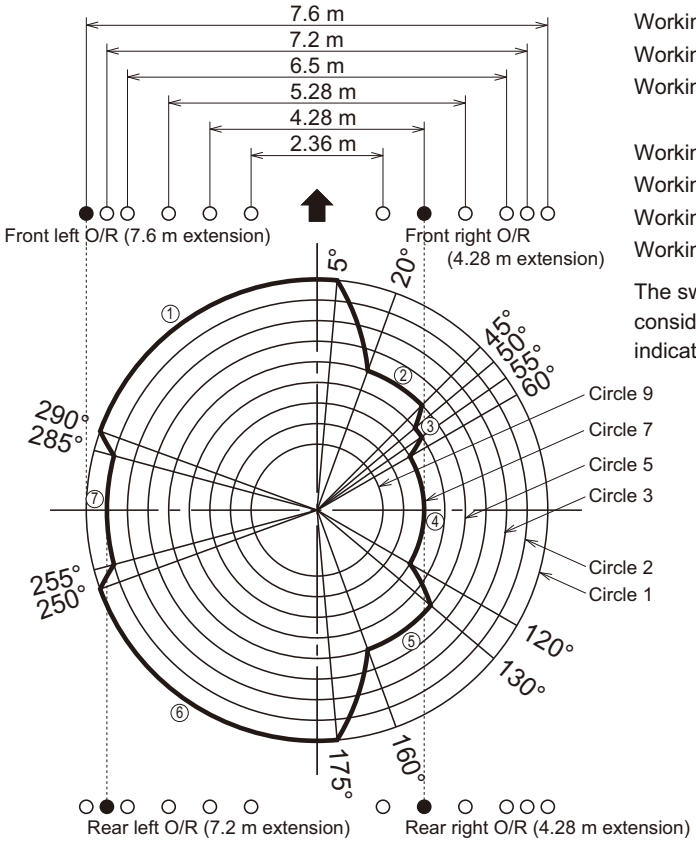


Working area ①: Maximum extension (7.6 m) capacity
Working area ②: Middle extension (5.28 m) capacity
Working area ③: Interpolated capacity value based on extension width of outriggers (4.8 m)
Working area ④: Middle extension (4.28 m) capacity
Working area ⑤: Middle extension (5.28 m) capacity
Working area ⑥: Maximum extension (7.6 m) capacity
Working area ⑦: Middle extension (7.2 m) capacity

The switchover area connecting each capacity range is considered as 5°, with the increase/decrease in capacity indicated proportionally.

## ■Working area diagram

Standard capacity

(Left side) (Right side)

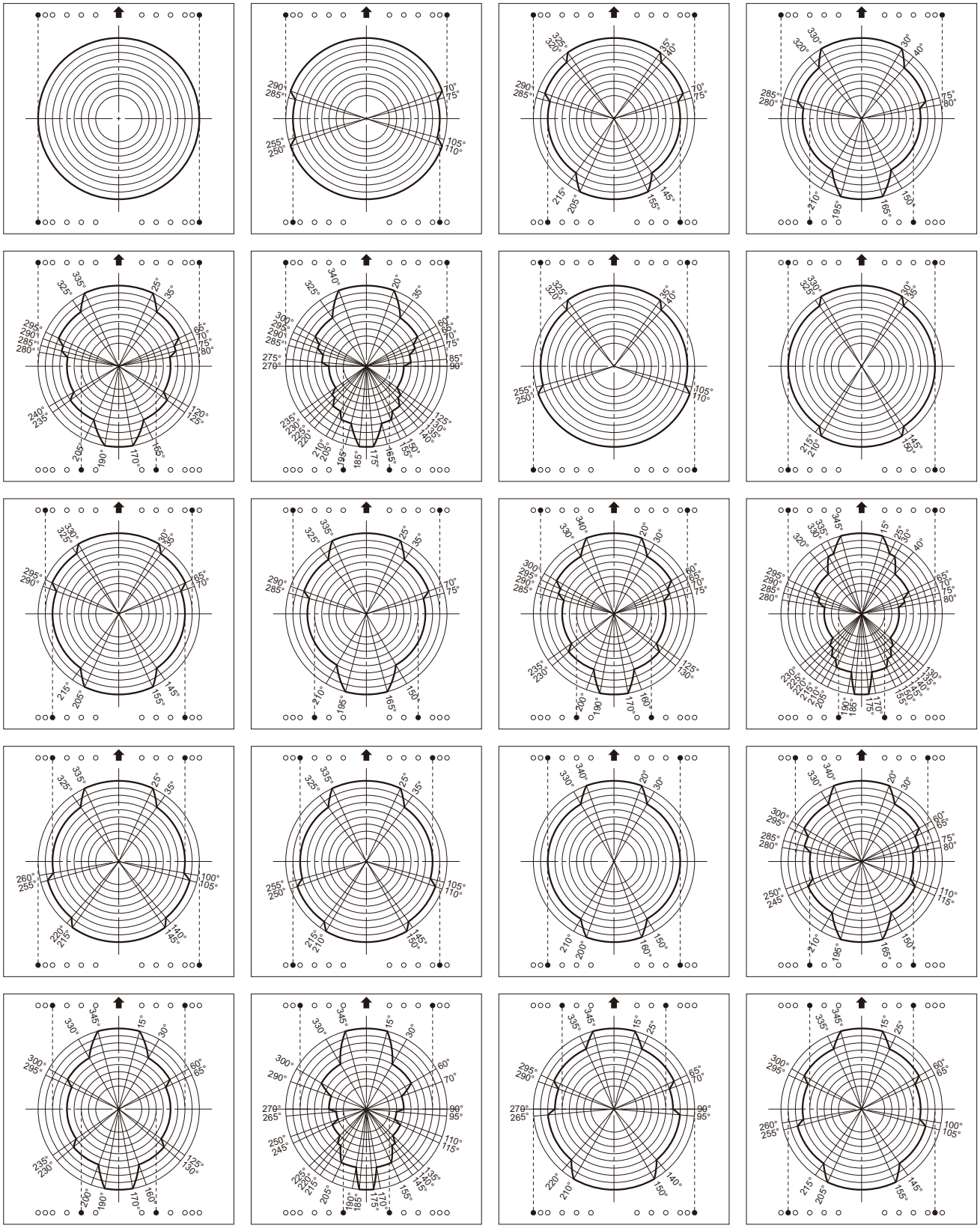

## Standard capacity

(Left side) (Right side)

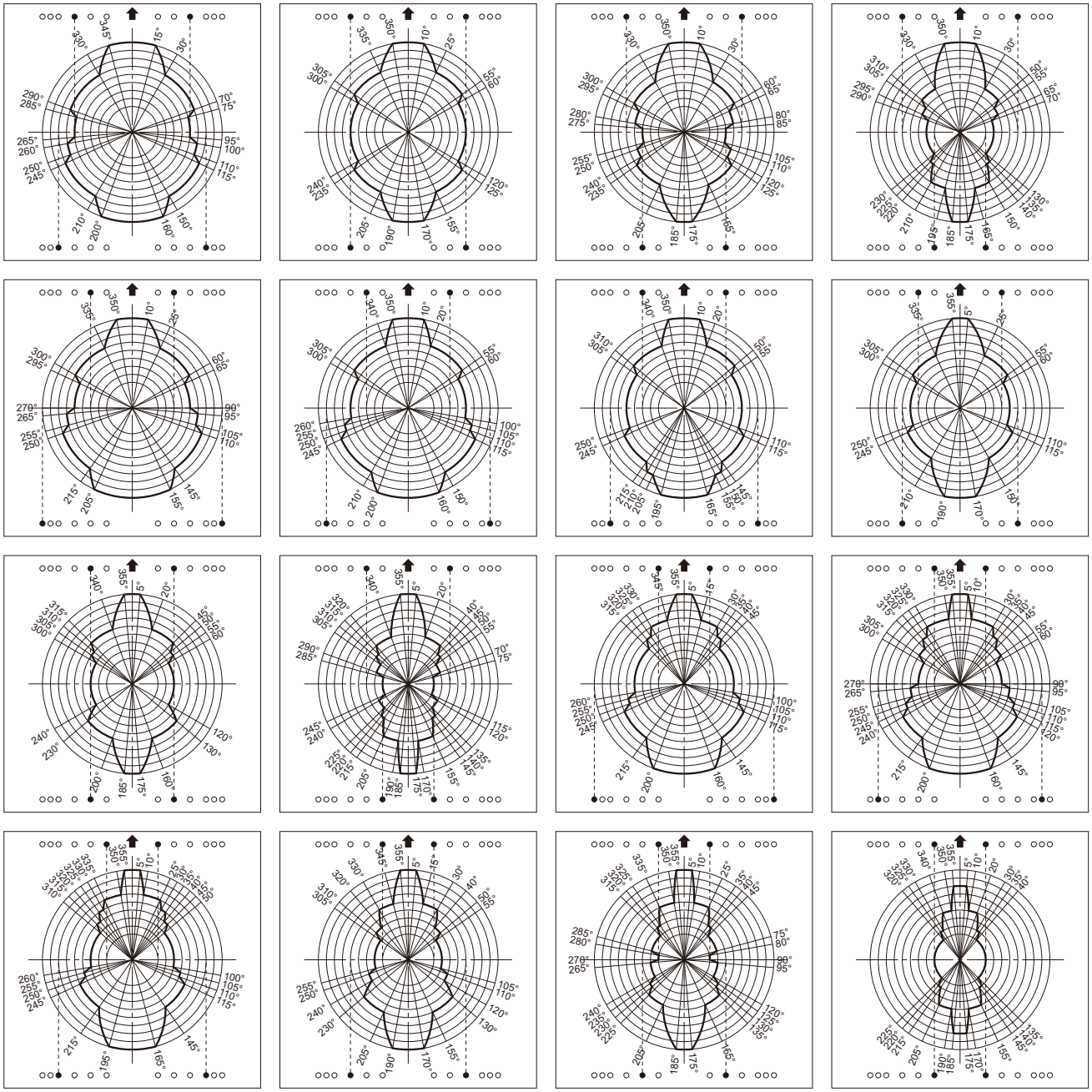

## ■Working area diagram

Smart Chart capacity

The size of the circles shown in the drawing of working area diagrams corresponds to capacities as determined by outrigger extension widths.

| | | Applicable capacity (boom lift) | Applicable capacity (jib lift) |
|---|---|---|---|
| Area ① | Smart Chart | ○ | ○ |
| Circle 1 | 7.6 m | ○ | ○ |
| Circle 2 | 7.2 m | ○ | ○ |
| Circle 3 | 6.5 m | ○ | ○ |
| Circle 4 | ( 6.0 m ) | ○ | ○ |
| Circle 5 | 5.28 m | ○ | ○ |
| Circle 6 | ( 4.8 m ) | ○ | ○ |
| Circle 7 | 4.28 m | ○ | ○ |
| Circle 8 | ( 3.5 m ) | ○ | |
| Circle 9 | 2.36 m | ○ | |

−Example−
When performing boom lift using the outrigger extension widths shown in the drawing, the capacity and range per each working area will be as listed below.

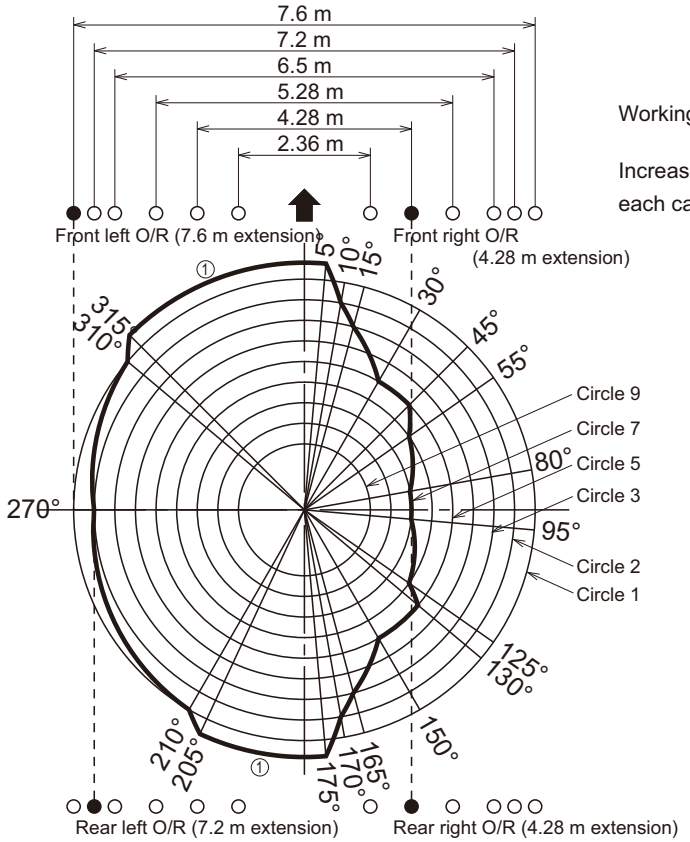


Working area ① : Smart Chart capacity

Increases/decreases for switchover areas connecting each capacity range are indicated proportionally.

## ■Working area diagram

Smart Chart capacity

(Left side) (Right side)

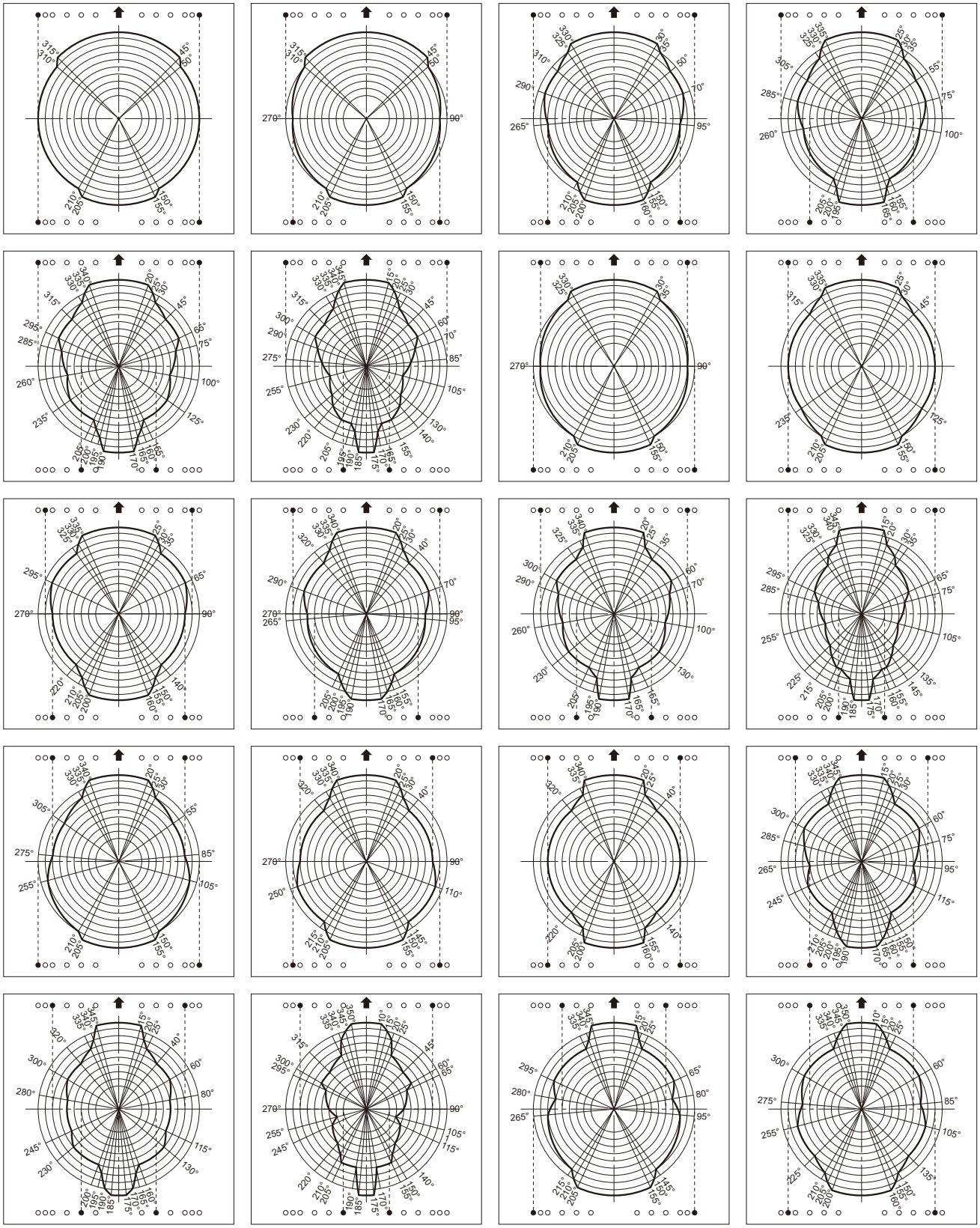

## Smart Chart capacity

(Left side) (Right side)

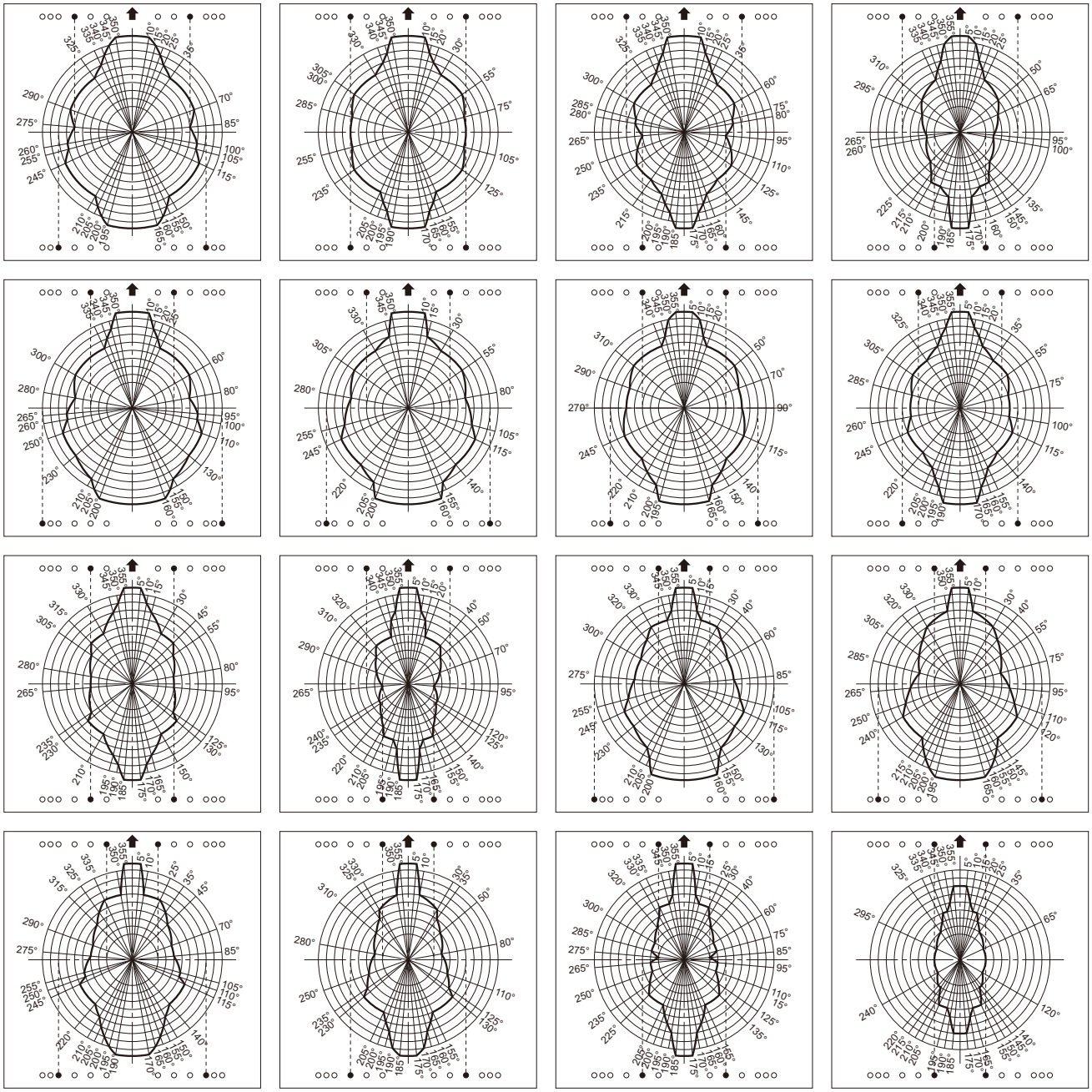

## ■DIMENSIONS

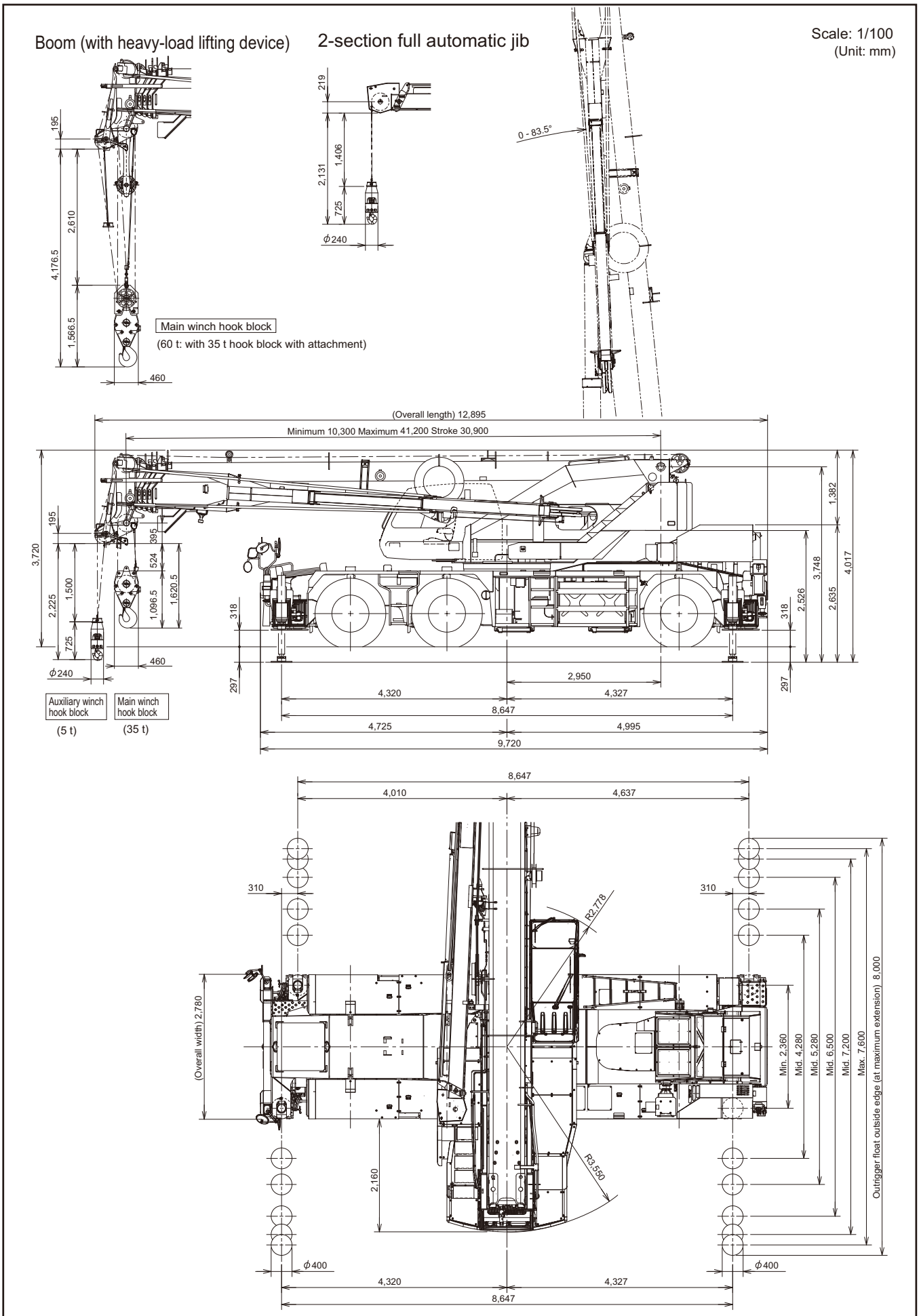


The AML external warning lamps, drum monitoring cameras, rear operation check cameras, LED marker lamps, position lamps and remote control searchlights depicted in this drawing are optional equipment.

## ■DIMENSIONS

Scale: 1/100
(Unit: mm)

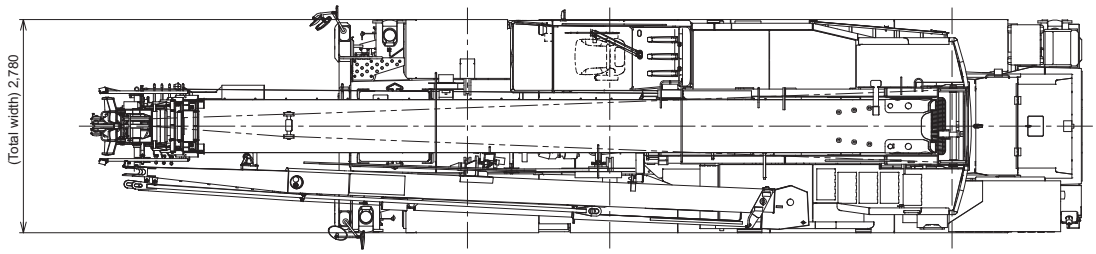


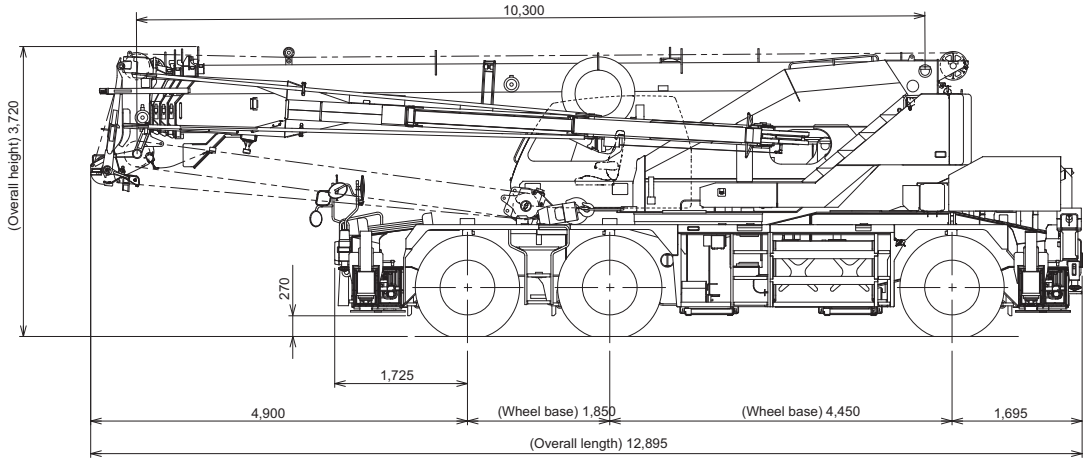


The AML external warning lamp, drum monitoring cameras, rear operation check cameras, LED marker lamps, position lamps and remote control searchlights depicted in this drawing are optional equipment.

●This model has received a “Basic running conditions - weight: D” certificate of conformance under the Newly Developed Vehicle Certificate System, but the actual running conditions will be decided based on the calculations of the road administrator for each route.

## ■Minimum right-angle passage width

●When turning right using front 4-wheel steering

R1 = 11.00 m (minimum turning radius)
R2 = 11.19 m (outside tire edge turning radius)
R3 = 12.28 m (vehicle turning radius)
R4 = 13.85 m (boom head turning radius)
R5 = 6.25 m (vehicle inside turning radius)
A = 5.85 m (entrance passage width)
B = 5.85 m (tire exit passage width)
C = 6.77 m (vehicle exit passage width)
D = 8.50 m (boom head exit passage width)

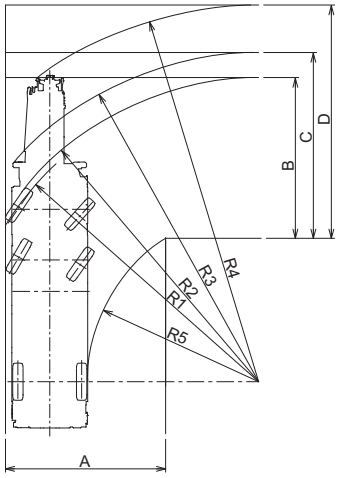


●When turning right using 6-wheel steering

R1 = 6.70 m (minimum turning radius)
R2 = 6.89 m (outside tire edge turning radius)
R3 = 7.14 m (vehicle turning radius)
R4 = 9.73 m (boom head turning radius)
R5 = 2.67 m (vehicle inside turning radius)
A1 = 4.08 m (tire entrance passage width)
A2 = 5.41 m (vehicle entrance passage width)
B = 4.08 m (tire exit passage width)
C = 5.41 m (vehicle exit passage width)
D = 7.43 m (boom head exit passage width)

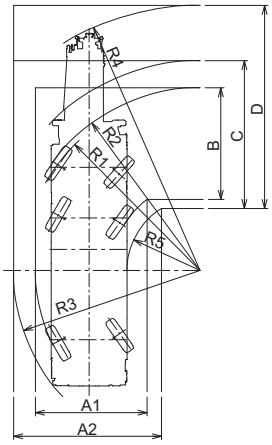


●When turning right using rear 2-wheel steering

R1 = 11.13 m (minimum turning radius)
R2 = 11.32 m (outside tire edge turning radius)
R3 = 12.11 m (vehicle turning radius)
R4 = 10.77 m (boom head turning radius)
R5 = 7.16 m (vehicle inside turning radius)
A1 = 5.42 m (tire entrance passage width)
A2 = 6.20 m (vehicle entrance passage width)
C = 6.20 m (vehicle exit passage width)
D = 6.75 m (boom head exit passage width)

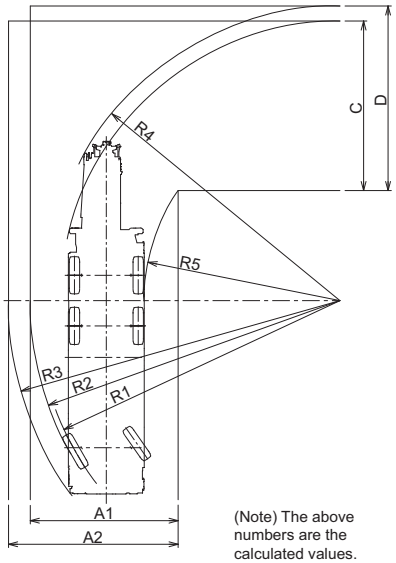


(Note) The above numbers are the calculated values.

| Model name | Spec | Spec No. |
|---|---|---|
| GR-600N | 60 t, 5-section boom 2-section full automatic jib, H-type outriggers | GR-600N-3-00101 |

Note: Due to improvements, specs for delivered products may differ slightly from those listed here.

TADANO LTD.